Chapter 2 Items Common to Facilities Subject to Technical Standards

1 Structural Members

Ministerial Ordinance

Performance Requirements for Structural Members Comprising the Facilities Subject to the Technical Standards

Article 7

1 The performance requirements for structural members comprising the facilities subject to the Technical Standards shall be such that the functions of the facilities concerned are not impaired and the continuous use of them is not affected by damage due to the actions of self weight, earth pressure, water pressure, variable waves, water currents, Level 1 earthquake ground motions, collision with floating objects, and/or other actions in light of the conditions of the facilities concerned during construction and in service.

2 In addition to the provisions of the preceding paragraph, the performance requirements for the structural members comprising the facilities of which there is a risk that damage may seriously affect human lives, property, and/or socioeconomic activity following a disaster shall be as specified in the subsequent items:

(1) In the event that the functions of the facilities concerned are impaired by damage due to tsunamis, accidental waves, Level 2 earthquake ground motions, and other actions, the structural stability of the facilities concerned shall not be affected significantly. Provided, however, that in the performance requirements for the structural members comprising the facilities in which further improvement of performance is necessary due to environmental conditions, social circumstances and other reasons to which the facilities concerned are subjected, the damage due to said actions shall not affect the restoration through minor repair works of the functions of the facilities.

(2) In the performance requirements for structural members comprising facilities which are required to protect the landward side of the facilities concerned from tsunamis, the damage due to tsunamis, Level 2 earthquake ground motions, and/or other actions shall not affect restoration through minor repair works of the functions of the facilities concerned.

3 In addition to the provisions of the preceding paragraph 1, the performance requirements for the structural members comprising high earthquake-resistance facilities shall be such that the damage due to Level 2 earthquake ground motions or other actions do not affect restoration through minor repair works of the functions required of the facilities concerned in the aftermath of the occurrence of Level 2 earthquake ground motions. Provided, however, that the structural members comprising the facilities in which higher earthquake-resistant performance is required due to environmental conditions and social circumstances surrounding the facilities concerned shall maintain the functions required of the facilities concerned in the aftermath of the occurrence of Level 2 earthquake ground motions for the continuous use of the facilities without impairing their functions.

4 In addition to the provisions of the preceding three paragraphs, necessary matters concerning the performance requirements for the structural members comprising facilities subject to the Technical Standards shall be provided by the Public Notice.

Public Notice

Structural Members Comprising the Facilities Subject to the Technical Standards

Article 21

The items to be specified by the Public Notice under paragraph 4 of Article 7 of the Ministerial Ordinance concerning the performance requirements of structural members comprising the facilities subject to the Technical Standards shall be as provided in the subsequent article through Article 28.

Performance Criteria Common to Structural Members

Article 22

1 The performance criteria common to structural members comprising the facilities subject to the Technical Standards shall be as specified in the subsequent items:

(1) The structural members comprising the facilities of which damage may induce serious impact on

human lives, property, or socioeconomic activity shall contain the degree of the damage owing to the accidental actions in the accidental action situation, of which the dominant actions are tsunamis, accidental waves, or Level 2 earthquake ground motions, at the level equal to or less than the threshold level corresponding to the performance requirements.

(2) The structural members comprising the facilities which are required to protect the landward side from tsunamis shall contain the degree of the damage owing to the accidental actions in the accidental action situation, of which the dominant actions are tsunamis or Level 2 earthquake ground motions, at the level equal to or less than the threshold level.

2 In addition to the provisions of the preceding paragraph, the performance requirements for the structural members comprising the high earthquake-resistance facilities shall be such that the degree of the damage owing to the accidental actions in the accidental action situation, of which the dominant action is Level 2 earthquake ground motions, is contained at the level equal to or less than the threshold level corresponding to the performance requirements.

3 In cases where the effects of scouring of the seabed and sand outflow on the integrity of structural members may impair the stability of the facilities, appropriate countermeasures shall be taken.

[Technical Note]

1.1 General

1.1.1 Basic Policy on Performance Verification

(1) This section describes verification of the structural performance of reinforced concrete members, prestressed concrete members, and steel-concrete composite members. These provisions may also be applied to non-reinforced concrete members and other similar members, considering their characteristics.

(2) Performance verification of structural members can be performed by substituting the limit state of the structural members based on the performance criteria specified from the performance requirements in the facilities. In this case, it may be generally performed by substituting either the ultimate limit state and the serviceability limit state, or the fatigue limit state. These respective limit states are defined as follows.

① Limit state for cross-sectional failure due to maximum load (ultimate limit state).

② Limit state for functional nonconformance due to actions that frequently occurs during the design working life (serviceability limit state).

③ Limit state for failure due to repeated action acting during the design working life similar to the ultimate limit state (fatigue limit state).

(3) When examining the safety of members by the limit state design method, it is necessary to set appropriate values for the following five partial factors; namely, a material factor, a load factor, a structural analysis factor, a member factor, and a structure factor, considering the characteristics of the facilities, the characteristics of the materials and actions, etc. corresponding to the limit state.

1.1.2 Examination of Ultimate Limit State

(1) Examination of the ultimate limit state of cross-sectional failure can be performed by confirming that the value obtained by multiplying the ratio of the design force resultant S_d to the design cross-sectional capacity R_d by the structure factor γ_i is 1.0 or less, as below

$$\gamma_i S_d / R_d \leq 1.0 \tag{1.1.1}$$

The design force resultant S_d can be obtained by calculating the force resultant S (S is a function of F_d) using the design load F_d, and multiplying by structural analysis factor γ_a,

$$S_d = \sum \gamma_a S(F_d) \tag{1.1.2}$$

The design cross-sectional resistance R_d can be obtained by calculating the resistance R (R is a function of f_d) of the member cross section using the design strength f_d, and dividing by the member factor γ_b as follows:

$$R_d = R(f_d)/\gamma_b \tag{1.1.3}$$

1.1.3 Examination of Serviceability Limit State

(1) Verification of the compressive stress of concrete in the permanent situation can be performed using Equation **(1.1.4)**.

$$\sigma'_c \leq 0.4 f'_{c_k} \tag{1.1.4}$$

where

σ'_c : compressive stress generated in concrete by permanent action (N/mm²)

f'_{ck} : characteristic value of compressive strength of concrete (N/mm²)

(2) Examination for Crack caused by Bending

① Verification of cracks caused by bending can be performed using equation **(1.1.5)**.

$$w \leq w_a \tag{1.1.5}$$

where

w : crack width (mm)

w_a : limit value of crack width (mm)

② The width w of a crack caused by bending can be calculated using equation **(1.1.6)**.

$$w = 1.1 k_1 k_2 k_3 \left[4c + 0.7(c_s - \phi)\right]\left(\frac{\sigma_{se}}{E_s} + \varepsilon'_{csd}\right) \tag{1.1.6}$$

where

w : crack width (mm)

k_1 : coefficient expressing the influence of surface profile of reinforcing bars on crack width (in case of deformed bars = 1.0)

k_2 : coefficient expressing the influence of quality of concrete on crack width

$$k_2 = \frac{15}{f'_c + 20} + 0.7$$

f'_c : compressive strength of concrete (N/mm²)

k_3 : coefficient expressing the influence of number of layers of tensile bars on crack width

$$k_3 = \frac{5(n+2)}{7n+8}$$

n : number of layers of tensile bars

c : concrete cover (mm)

c_s : distance between centers of reinforcing bars

ϕ : diameter of tensile reinforcing bar; nominal diameter of the smallest reinforcing bar (mm)

E_s : Young's modulus of reinforcing bar (N/mm²)

ε'_{csd} : compressive strain for considering increase in crack width due to concrete shrinkage, creep, etc. In general cases, on the order of 150×10^{-6}; in case of high strength concrete, a value around 100×10^{-6} may be used.

σ_{se} : stress increment of reinforcing bar near the surface of member (N/mm²)

③ The increment of reinforcing bar stress σ_{se} can be obtained using equation **(1.1.7)**, assuming the cross section is in the elastic range.

$$\sigma_{se} = \frac{M_d}{A_s jd} \tag{1.1.7}$$

where

M_d : design value of flexural moment in examination of serviceability limit state (N/mm)

$j = 1 - k/3$

k : neutral axis ratio $\left(= \sqrt{2np_w + (np_w)^2} - np_w\right)$

n : Young's modulus ratio ($= E_s/E_c$)

p_w : ratio of reinforcement to concrete sections ($= A_s/b_w d$)

d : effective height (mm)

b_w : width of member (mm)

A_s : cross-sectional area of reinforcing bars (mm²)

④ In general, the limit values of the crack width are listed in **Table 1.1.1** based on **Standard Specifications for Concrete Structures [Structural Performance Verification]**. Provided, however, that the applicability of this table shall be limited to concrete cover of 100mm or less.

Table 1.1.1 Limit Values of Crack Width Caused by Bending w_a

Environmental condition	Deformed bar/plain bar	Prestressing steel
Particularly severe corrosion environment	0.0035c	–
Corrosion environment	0.004c	–
Ordinary environment	0.005c	0.004c

(c denotes for cover depth.)

Here, "particularly severe corrosion environment" is applied in the case of exposure to severe marine environments, for example, in the case of outside reinforcing bars of caissons and reinforcing bars on the downside of pier superstructures. "Corrosion environment" can be applied to other cases than these, but "ordinary environment" may also be applied in cases where pavement is laid, as in pier floor slabs, and a sealed space, as in caisson compartments and the like.

⑤ Cracks in structural members due to causes other than the load acting on the structure, for example, cracks originating in initial period defects, which do not close when the load is removed are excluded from application of this method. Separate examination is necessary.

(3) Verification of Water-tightness

When water-tightness is required, verification can be performed using the crack width as an index. In this case, it is necessary to specify the limit value of the crack width appropriately, considering the service conditions of the facilities, the characteristics of loads acting on the facilities, etc.

In general, the limit values presented in **Table 1.1.2** can be used, based on the **Standard Specifications for Concrete Structures [Structural Performance Verification]**.

Table 1.1.2 Limit Value of Crack Width w_a for Water-tightness

Level of water-tightness requirement		High	Normal
Predominant member force	Axial tension	–*1)	0.1mm
	Flexural bending*2)	0.1mm	0.2mm

*1) Concrete stresses due to stress resultant should be in compression at whole area. Minimum compressive stress should be greater than 0.5N/mm^2. In case that detailed analysis is carried out the value may be determined differently.

*2) Under the action of reversed cyclic loadings, the limit crack width should be determined in a manner similar to that under axial tension.

(4) In cases where the action of cargo handling equipment is comparatively large and deflection to an extent that will hinder cargo handling can be expected, as in the superstructures of piers, a verification of serviceability shall be made, using deflection as the index as necessary. The limit value of deflection in this case can be determined referring to the performance of the crane and **Specifications for Highway Bridges and Commentaries (Japan Road Association)**.

1.1.4 Examination of Fatigue Limit State

(1) When variable actions account for a high percentage of all actions and the magnitude of variable actions is large, examination for fatigue is necessary.

(2) In examination of the fatigue limit state, safety with respect to fatigue failure is judged by appropriately classifying cyclic actions by rank, calculating the influence of each ranked action on fatigue failure, and totaling the influences of all ranked actions. Safety with respect to fatigue failure is not only influenced by the magnitude of the action, but is also greatly influenced by the number of repetitions of the action; therefore, the number of repetition must be set appropriately. The influence of actions of a rank that does not cause fatigue failure when the number of repetition exceeds 2×10^6 may be disregarded.

1.1.5 Examination of Change in Performance Over Time

(1) The performance possessed by structural members shall not fall below the required performance due to deterioration of the materials or similar factors occurring during the design working life. Therefore, it is generally necessary to verify the following items with regard to concrete and reinforcing bars. In existing facilities with a design working life of about 50 years, examination of changes in performance over time can be omitted for facilities which show no remarkable reduction of performance due to deterioration caused by chloride attack during the design working life, provided the facilities satisfy the following conditions.

① As the concrete cover for the outer side reinforcing bars (side in contact with sea water), a value equal to or greater than the standard value for particularly severe corrosion environments specified in **Table 1.1.4** shall be set, and similarly, for the inner side reinforcing bars (side in contact with the filling), a value equal to or greater than that for ordinary environments shall be set.

② Concrete with the water-to-cement ratio specified in **Table 3.2.2** of **Part II, Chapter 11, 3.2 Concrete Quality and Performance Characteristics** shall be used as the maximum value.

③ Construction work shall be performed with care.

(2) Corrosion of Reinforcing Bars due to Carbonation.

① Verification of corrosion of reinforcing bar due to carbonation may be performed using equation **(1.1.8)**.

$$\gamma_i y_d / y_{lim} \leq 1.0 \tag{1.1.8}$$

where

γ_i : structure factor
y_d : design value of carbonation depth (mm)
y_{lim} : limit carbonation depth (mm)

② The design value of carbonation depth y_d can be calculated using equation **(1.1.9)**.

$$y_d = \gamma_{cb}\, \alpha_d \sqrt{t} \tag{1.1.9}$$

where

γ_{cb} : partial factor considering deviation in the design carbonation y_d. In general, 1.15 may be used.
α_d : design value of carbonation rate coefficient (mm·y$^{-1/2}$)
$\alpha_d = \alpha_k \beta_e \gamma_c$
t : design working life (y)
α_k : characteristic value of carbonation rate coefficient (mm·y$^{-1/2}$)
β_e : coefficient considering environmental action.
In cases where port and harbor facilities are not exposed to remarkable drying conditions, 1.0 may be generally used; in case where facilities are exposed to easy-to-dry environment as facing to the south, 1.6 may be used.
γ_c : material factor of concrete; in general, 1.0 may be used.

③ The characteristic value of the carbonation rate coefficient α_d can be determined using Equation **(1.1.10)**. The predicted value of the carbonation rate of concrete shown here was obtained by regression equation [1)] for ordinary Portland cement or moderate heat Portland cement.

$$\alpha_k = \gamma_p \alpha_p$$
$$\alpha_p = -3.57 + 9.0 W/B \tag{1.1.10}$$

where

γ_p : safety factor consider the accuracy of α_p. In general, 1.1 may be used.
α_p : predicted value of carbonation rate coefficient of concrete (mm·y$^{-1/2}$)
W/B: water-to-binder ratio of concrete

④ The limit carbonation depth for reinforcing bar corrosion y_{lim} can be obtained using Equation **(1.1.11)**.

$$y_{lim} = c - c_k \tag{1.1.11}$$

where

c : design cover (mm)

c_k : remaining depth carbonation (mm). In general, 25mm should be used in marine environments.

(3) Corrosion of Reinforcing Bars due to Penetration of Chloride Ions

① The verification of reinforcing bar corrosion due to penetration of chloride ions can generally be performed using Equation **(1.1.12)**.

$$\gamma_i C_d / C_{lim} \leq 1.0 \tag{1.1.12}$$

where

γ_i : structure factor
C_d : design value of chloride ion concentration at the position of reinforcing bar (kg/m^3)
C_{lim} : limit value of chloride ion concentration for initiation of corrosion (kg/m^3)

In verification of reinforcing bar corrosion by chloride ions, setting of various limit states is conceivable; here, however, the limit state is defined as the situation when corrosion of the reinforcing bars occurs, considering a safety side assessment and the fact that a comparative assessment is possible at the current technical level.

② The design value of the chloride ion concentration at the position of the reinforcing bars C_d can be obtained using Equation **(1.2.13)**.

$$C_d = C_0\left(1 - erf\left(\frac{0.1c}{2\sqrt{D_d t}}\right)\right) \tag{1.1.13}$$

where

C_0 : chloride ion concentration at the surface of concrete (kg/m^3)
c : design concrete cover (mm)
D_d : design diffusion coefficient of concrete for chloride ions (cm^2/y)
t : design working life (y)

erf : error function $\left(erf(s) = \frac{2}{\sqrt{\pi}}\int_0^s e^{-\eta^2} d\eta\right)$

③ It is preferable to set the chloride ion concentration at the surface of the concrete C_0 based on actual data measured under the environmental conditions similar to those at the location where the structural member is to be installed. In cases where the distance between the water level (H.W.L.) and the bottom surface of the members of the concrete superstructure of an open-type wharf is on the order of 0-2.0m, C_0 can be set using equation **(1.1.14)**, based on the measured data in Reference 2).

$$C_0 = -6.0x + 15.1 \tag{1.1.14}$$

where

C_0 : chloride ion concentration at the surface of concrete (kg/m^3); it shall not be less than 6.0kg/m^3.
x : distance between H.W.L. and the bottom surface of the member (m)

④ The design diffusion coefficient for chloride ions D_d can be obtained using equation **(1.1.15)**.

$$D_d = \gamma_c D_k + \left(\frac{w}{\ell}\right)\left(\frac{w}{w_a}\right)^2 D_0 \tag{1.1.15}$$

where

γ_c : material factor of concrete. In general, it may be 1.0.
D_k : characteristic value of diffusion coefficient for chloride ions in concrete (cm^2/y)
D_0 : constant expressing the effect of cracking on migration of chloride ions in concrete. In general, it may be 200cm^2/y.
w : crack width (mm)
w_a : limit value of crack width (mm)
w/ℓ : ratio of crack width to crack interval
$w/\ell = 3(\sigma_{se} E_s + \varepsilon'_{csd})$
σ_{se} : increment of reinforcement stress (N/mm^2)
E_s : Young's modulus of reinforcing bars (N/mm^2)
ε'_{csd} : compressive strain for considering an increase in crack width due to concrete shrinkage and creep, etc. It may be set in accordance with equation **(1.1.6)**.

⑤ When the concrete which will actually be used is known in advance, the characteristic value of the diffusion coefficient for chloride ions D_k in concrete shall be set by the experiments [3] using specimens prepared from the concrete. In other cases, D_k may be set using equation **(1.1.16)**.

$$D_k = \gamma_p \alpha D_p \tag{1.1.16}$$

When using ordinary Portland cement [1]

$$\log D_p = -3.9(W/C)^2 + 7.2(W/C) - 2.5 \tag{1.1.17}$$

When using blast furnace cement or silica fume [1]

$$\log D_p = -3.0(W/C)^2 + 5.4(W/C) - 2.2 \tag{1.1.18}$$

where

α : adjusting factor; when using ordinary Portland cement, 0.65 may generally be used; [2] when using blast furnace cement or silica fume, 1.0 may generally be used.

γ_p : partial factor considering the accuracy of D_p. In general, 1.0 may be used.

D_p : predicted value of diffusion coefficient of concrete (cm^2/y)

⑥ The limit concentration of chloride ion to initiate corrosion of reinforcing bar C_{lim} shall be set appropriately considering the condition of similar structures, etc. In the cases where port and harbor facilities are constructed in ordinary marine environments, and the concrete cover specified in **1.1.7 Details of Structures** is satisfied, C_{lim} can generally be set at 2.0kg/m^3. This is the lower limit of the chloride ion concentration for corrosion initiation of reinforcing bars based on the results of experiments at the Port and Airport Research Institute (PARI).[4]

1.1.6 Partial Factors

The partial factors listed in **Table 1.1.3** can be used in verification of structural concrete. This table presents standard values for partial factors; if partial factors can be determined appropriately by other methods, those values may be used.

Table 1.1.3 Partial Factors 5), 6), 7)

Partial factor		Type of limit state		
		Ultimate limit	Serviceability limit	Fatigue limit
Material factor γ_m	Concrete	1.3	1.0	1.3
	Reinforcing bars and prestressing steel	1.0	1.0	1.05
	Steel materials other than above	1.05	1.0	1.05
Load factor γ_f	Permanent action	1.0-1.1 (0.9-1.0)	1.0	1.0
	Variable action			
	Wave force	1.2	1.0	1.0
	Actions other than wave force	1.0-1.2 (0.8-1.0)	1.0	1.0
	Accidental actions	1.0	–	–
	Actions during construction	1.0	–	–
Structural analysis factor γ_a		1.0	1.0	1.0
Member factor γ_b		1.1-1.3	1.0	1.0
Structure factor γ_i		1.0-1.2	1.0	

Note 1) The figures in parentheses in the table shall be applied to cases where the small action results in the large risk.
Note 2) The values below may be used for the member factor when examining the ultimate limit state.
- When calculating flexual and axial capacity : 1.1
- When calculating upper limit of axial compressive capacity : 1.3
- When calculating shear capacity borne by concrete : 1.3
- When calculating shear capacity borne by shear reinforcing bars : 1.1

Note 3) The values below may be used for the structure factor relating to the ultimate limit state.

		Permanent situation	Variable situation	Accidental situation
Superstructure of open-type wharf	Slab	1.2	1.2	1.0
	Beam	1.1	1.1	1.0
Breakwater		1.0	1.1	1.0
Quaywall (caisson, etc.)		1.0	1.1 (only during earthquake: 1.0)	1.0
Others (sheet pile superstructure, etc.)		1.0	1.1	1.0

1.1.7 Structural Details

(1) Concrete Cover

① The concrete cover secures the bond strength between reinforcing bars and concrete, which is a precondition for verification of concrete structural members, and also has a large influence on durability. Accordingly, it is necessary to set the concrete cover appropriately, considering the required durability, the functions of the facilities, errors during construction work, etc.

② The concrete cover should generally have values equal to or greater than those in **Table 1.1.4**. Provided, however, that adequate consideration must be given to control of crack width when a concrete cover exceeds 100mm. In performance verification, errors during construction work for the cover may not be considered subject to the precondition on proper management and inspection during construction work.

Table 1.1.4 Standard Values of Concrete Cover

Environmental condition	Cover (mm)	Remarks
Severe corrosion environment	70	Parts in direct contact with sea water, and parts washed with sea water, parts exposed to severe sea breeze
Normal environment	50	Parts other than the above

③ The concrete cover specified in **Table 1.1.4** may be reduced provided adequate examination is performed, for factory-manufactured concrete products.

(2) Other structural details may conform to the **Standard Specifications for Concrete Structures [Structural Performance Verification]**.

1.2 Caissons

Public Notice

Performance Criteria of Caisson

Article 23

The performance criteria of a reinforced concrete caisson (hereinafter referred to as "caisson" in this article) shall be as specified in the subsequent items in consideration of the type of the facilities:

(1) For the bottom slab and footing of a caisson, the risk of impairing the integrity of the bottom slab and footing of the caisson shall be equal to or less than the threshold level under the permanent action situation in which the dominant action is self weight and under the variable action situation in which the dominant actions are variable waves, water pressure during floating, and Level 1 earthquake ground motions.

(2) For the outer walls of a caisson, the risk of impairing the integrity of the outer walls of the caisson shall be equal to or less than the threshold level for a permanent action situation in which the dominant action is the internal earth pressure and under the variable action situation in which the dominant actions are variable waves, water pressure during floating, and Level 1 earthquake ground motions.

(3) For partition walls of a caisson, the risk of impairing the integrity of the partition walls of the caisson shall be equal to or less than the threshold level under the variable action situation in which the dominant action is water pressure during installation.

(4) In the case of a caisson which requires flotation, the risk of overturning of the floating body during flotation shall be equal to or less than the threshold level under the variable action situation in which the dominant action is water pressure.

[Commentary]

(1) Performance Criteria of Caissons

As the performance criteria of caissons and indexes corresponding to design situations, items which require performance verification shall be set appropriately depending on the type of facilities.

① Bottom slab and footing (serviceability)

The performance criteria and indexes corresponding to design situations excluding accidental situations for caissons are shown in accordance with design situations.

(a) Permanent situation in which dominating action is self weight

Among the performance criteria and indexes corresponding to design situations (excluding accidental situations) for the bottom slab and footing of caisson, those for the permanent situation in which the dominating action is self weight are as shown in the **Attached Table 4**.

Attached Table 4 Performance Criteria and Setting of Design Situation (permanent situation in which dominating action is self weight) for Bottom Slab and Footing of Caisson

Ministerial Ordinance			Public Notice			Performance requirements	Design situation			Verification item	Index of standard limit value
Article	Paragraph	Item	Article	Paragraph	Item		Situation	Dominating action	Non-dominating action		
7	1	–	23	1	1	Serviceability	Permanent	Self weight	Water pressure, sub-grade reaction, surcharge, earth pressure	Cross-sectional failure of bottom slab and footing	Design cross-sectional resistance (ultimate limit state)
										Serviceability of cross section of bottom slab and footing	Limit value of bending compressive stress (serviceability limit state)
										Extrusion of bottom slab and footing from partition wall (yield of reinforcing bars)	Design yield stress

(b) Variable situation in which dominating action is variable wave

Among the performance criteria and indexes corresponding to design situations excluding

accidental situations for the bottom slab and footing of caisson, those for the variable situation in which the dominating action is variable waves are as shown in the **Attached Table 5**.

Attached Table 5 Performance Criteria and Setting of Design Situation (variable situation in which dominating action is variable waves) for Bottom Slab and Footing of Caisson

Ministerial Ordinance			Public Notice			Performance requirements	Design situation			Verification item	Index of standard limit value
Article	Paragraph	Item	Article	Paragraph	Item		Situation	Dominating action	Non-dominating action		
7	1	–	23	1	1	Serviceability	Variable	Variable waves*1)	Self weight, water pressure, sub-grade reaction, surcharge, earth pressure	Cross-sectional failure of bottom slab and footing	Design cross-sectional resistance (ultimate limit state)
										Extrusion of bottom slab from partition wall (yield of reinforcing bars)	Design yield stress
								Variable waves*2)		Serviceability of bottom slab and footing	Limit value of crack width due to bending (serviceability limit state)
								Cyclic action of waves*3)		Fatigue failure of bottom slab and footing	Design fatigue strength (fatigue limit state)

*1): Here, among waves specified, Article 8, Paragraph 1.1 of the Public Notice, the waves shall be waves which are used in performance verification of the structural stability of the objective facilities.

*2): Here, among the waves specified, Article 8, Paragraph 1.2 of the Public Notice, the wave having a height greater than the specified waves which attack with a frequency on the order of 10^4 times during the design working life shall be used as a standard.

*3): Here, among the waves specified , Article 8, Paragraph 1.2 of the Public Notice, the waves shall be set appropriately depending on the frequency of appearance in regard to wave height and wave period occurring during the design working life.

(c) Variable situations in which dominating action is water pressure during flotation and Level 1 earthquake ground motion

Among the performance criteria and indexes corresponding to design situations excluding accidental situations for the bottom slab and footing of caisson, those for variable situations in which the dominating actions are water pressure during flotation and Level 1 earthquake ground motion are as shown in the **Attached Table 6**.

Attached Table 6 Performance Criteria and Setting of Design Situation (variable situations in which dominating actions are water pressure during flotation and Level 1 earthquake ground motion) for Bottom Slab and Footing of Caisson

Ministerial Ordinance			Public Notice			Performance requirements	Design situation			Verification item	Index of standard limit value
Article	Paragraph	Item	Article	Paragraph	Paragraph		Situation	Dominating action	Non-Dominating action		
7	1	–	23	1	1	Serviceability	Variable	Water pressure during Caisson	Self weight	Cross-sectional failure of bottom slab and footing	Design cross-sectional resistance (ultimate limit state)
										Serviceability of cross section of bottom slab and footing	Limit value of crack width due to bending (serviceability limit state)
								Level 1 earthquake ground motion	Self weight, water pressure, sub-grade reaction	Cross-sectional failure of bottom slab and footing	Design cross-sectional resistance (ultimate limit state)
										Extrusion of bottom slab from partition wall (yield of reinforcing bars)	Design yield stress

*1) Here, among waves specified, Article 8, Paragraph 1.1 of the Public Notice, the waves shall be waves which are used in performance verification of the structural stability of the objective facilities.

*2) Here, among the waves specified, Article 8, Paragraph 1.2 of the Public Notice, the wave having a height greater than the specified waves which attack with a frequency on the order of 104 times during the design working life shall be used as a standard.

*3) Here, among the waves specified , Article 8, Paragraph 1.2 of the Public Notice, the waves shall be set appropriately depending on the frequency of appearance in regard to wave height and wave period occurring during the design working life.

② Outer walls (serviceability)

(a) The performance criteria and setting of design situations excluding accidental situations for the outer walls of caissons are as shown in the **Attached Table 7**.

Attached Table–7 Performance Criteria and Setting of Design Situations (excluding accidental situations) of Outer Walls of Caissons

Ministerial Ordinance			Public Notice			Performance requirements	Design situation			Verification item	Index of standard limit value
Article	Paragraph	Item	Article	Paragraph	Item		Situation	Dominating action	Non-Dominating action		
7	1	–	23	1	2	Serviceability	Permanent	Internal earth pressure	Internal water pressure	Serviceability of cross section of outer wall	Limit value of bending compressive stress (serviceability limit state)
										Extrusion of outer wall from partition wall (yielding of reinforcing bars)	Design yield stress
							Variable	Variable waves*1)	Internal water pressure, internal earth pressure	Cross-sectional failure of outer wall*2)	Design cross-sectional resistance (ultimate limit state)
								Variable waves*3)		Serviceability of cross section of outer wall	Limit value of crack width due to bending (serviceability limit state)
								Cyclic action of waves*4)		Fatigue failure of outer wall*2)	Design fatigue strength (fatigue limit state)
								Level 1 earthquake ground motion	Internal water pressure, internal earth pressure	Cross-sectional failure of outer wall	Design cross-sectional resistance (ultimate limit state)
								Water pressure during flotation		Cross-sectional failure of outer wall	Design cross-sectional resistance (ultimate limit state)
										Serviceability of cross section of outer wall	Limit value of crack width due to bending (serviceability limit state)

*1): Here, among waves specified, Article 8, Paragraph 1.1 of the Public Notice, the waves shall be waves which are used in performance verification of the structural stability of the objective facilities.
*2) Limited to outer walls affected by waves.
*3) Here, among the waves specified , Article 8, Paragraph 1.2 of the Public Notice, the wave having a height greater than the specified waves which attack with a frequency on the order of 10^4 times during the design working life shall be used as a standard.
*4) Here, among the waves specified, Article 8, Paragraph 1.2 of the Public Notice, waves shall be set appropriately depending on the frequency of appearance in regard to the wave height and wave period occurring during the design working life.

③ Partition wall (serviceability)

(a) The performance criteria and the setting of design situations (excluding accidental situations) for the partition walls of caissons are as shown in the **Attached Table 8**.

Attached Table 8 Performance Criteria and Setting of Design Situations (excluding accidental situations) of Partition Walls of Caissons

Ministerial Ordinance			Public Notice			Performance requirements	Design situation			Verification item	Index of standard limit value
Article	Paragraph	Item	Article	Paragraph	Item		Situation	Dominating action	Non-Dominating action		
7	1	–	23	1	3	Serviceability	Variable	Water pressure during installation	–	Cross-sectional failure of partition wall	Design cross-sectional resistance (ultimate limit state)
										Serviceability of cross section of partition wall	Limit value of crack width due to bending (serviceability limit state)

④ Caissons requiring flotation (serviceability)

(a) The performance criteria and setting of design situations (excluding accidental situations) for caissons requiring flotation are as shown in the **Attached Table 9**.

Attached Table 9 Performance Criteria and Setting of Design Situations (excluding accidental situations) of Caissons Requiring Flotation

Ministerial Ordinance			Public Notice			Performance requirements	Design situation			Verification item	Index of standard limit value
Article	Paragraph	Item	Article	Paragraph	Item		Situation	Dominating action	Non-Dominating action		
7	1	–	23	1	4	Serviceability	Variable	Water pressure	Self weight	Overturning of floating body	Limit value for overturning

[Technical Note]

1.2.1 Fundamentals of Performance Verification

(1) The description presented here may be applied to the performance verification of structural members in ordinary reinforced concrete caissons.

(2) For the concept for verification of structural members, **1.1 General** may be used as reference.

(3) An example of the performance verification procedure for caissons is shown in **Fig. 1.2.1**.

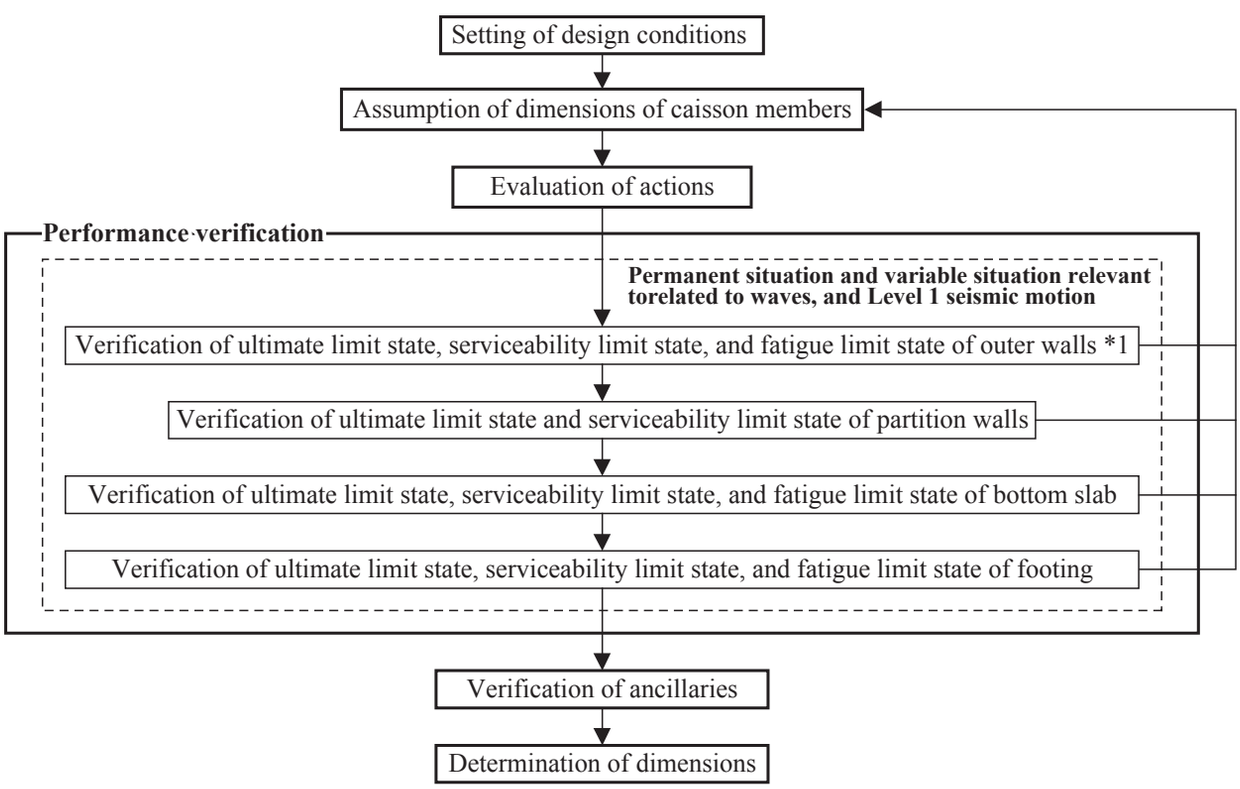

*1 For outer walls which are not affected by waves, only verification of the serviceability limit state may be required.

*2 For the high earthquake-resistance facilities or facilities of which damage to the facilities is expected to have a serious impact on human life, property, and social activity, it is preferable to perform, verification of accidental situations as necessary. Verification of the accidental situation for waves is performed where hazardous cargo handling facilities are located immediately behind the objective facilities and damage of the facilities is expected to have a serious impact.

Fig. 1.2.1 Example of Performance Verification Procedure for Caissons

1.2.2 Determination of Basic Cross Section and Characteristic Values

(1) The dimensions of caisson members shall be determined in view of the following factors :

① Capacity of caisson fabrication facilities

② Draft of a caisson and the water depth at the place of installation (depth above the crown of foundation mound)

③ Floating stability

④ Working conditions during towing and installation : tidal currents, waves, wind, etc.

⑤ Working conditions after installation of caisson : filling, placing upper concrete, tidal currents, waves, wind, etc.

⑥ Differential settlement of mound

⑦ Bending and torsion acting on caisson.

(2) In many cases, dimensions of 0.3-0.6m for the thickness of caisson outer walls, 0.4-0.8m for the thickness of the bottom slab, and 0.2-0.3m for the thickness of the partition walls are used.

(3) As the keel clearance depth during installation, it is common to set the difference between the draft of ordinary caissons and the mound crown as 0.5m or more.

(4) For caissons which float unassisted, a cross section capable of securing stability during flotation is set.

① Verification of the stability of the caisson while floating may be performed using equation **(1.2.1)** (see **Fig. 1.2.2**). This equation can be applied in cases where the caisson cross section is bilaterally symmetrical, and it is considered that only comparatively slight inclination will occur in the caisson which afloat.

$$\frac{I}{V} - \overline{CG} = \overline{GM} > 0 \tag{1.2.1}$$

where

V : displacement volume (m^3)
I : secondary moment of cross section around long axis at water level (m^4)
C : center of buoyancy
G : center of gravity
M : metacenter

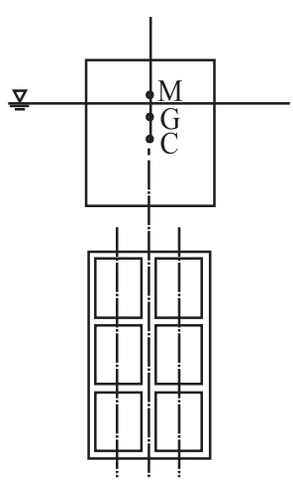

Fig. 1.2.2 Stability of Caisson

② For verification of stability in case of towing using a counterballast, equation (**1.2.2**) or (**1.2.3**) may be used.

(a) When using water as the counterballast:

$$\frac{1}{V'}\left(I' - \sum i\right) - \overline{C'G'} > 0 \tag{1.2.2}$$

(b) When using sand or stone or concrete as the counterballast:

$$\frac{I'}{V'} - \overline{C'G'} > 0 \tag{1.2.3}$$

where

i : moment of inertia of water surface in partition chambers about centerline parallel to axis of rotation of caisson (m^4)

V', I', C', G' : respective values of positions when counterballast is used

1.2.3 Actions

(1) It is preferable that the combination of actions and load factors considered in performance verification be set appropriately for each facility.

(2) The combination of actions and load factors may be set as follows.

① The combinations of actions considered and the standard values of the load factors to be used for multiplying the characteristic value in performance verification are shown in **Table 1.2.1**. Here, the footing may be treated in the same manner as the bottom slab. The values in the upper rows of the respective boxes in the table are load factors to be used when examining the ultimate limit state; the numerical values shown in square brackets are load factors to be used when a small action induces a large impact. Most of these values were set considering the relationship with external stability etc. by reliability analysis.[5), 7)] The figures in parentheses ( ) in the lower rows of the respective boxes are load factors for examination of the serviceability limit state. For accidental situations, a load factor of 1.0 may be used.

In recent years, reduction of the construction cost of breakwaters and other facilities by alleviating_the leveling accuracy of the rubble mound has been studied. However, if the leveling accuracy of the rubble mound is alleviated, a reaction greater than that in case of the normal leveling accuracy ±5cm will act on the caisson bottom slab, and in this case, the values shown in **Table 1.2.1** cannot be used. In the case where the leveling accuracy of the rubble mound is alleviated in the range of ±30cm, the factors can be set referring to the References **8)** and **9)**.

Table 1.2.1 Combinations of Actions and Load Factors

(a) Breakwaters

Situation	Design situation	Self weight	Hydrostatic pressure	Internal earth pressure	Bottom slab reaction	Internal water pressure	Uplift pressure	Variable component of bottom slab reaction	Variable component of internal water pressure	Wave force	Dynamic water pressure	Hydrostatic head difference between chambers	Remarks
In service	Permanent situation for self weight	0.9 1.0	1.1 (1.0)		1.1 (1.0)								Bottom slab
	Permanent situation for internal earth pressure			1.1 (1.0)		1.1 (1.0)							Outer wall
	Variable situation for waves	1.1 [0.9] (1.0)	1.1 [0.9] (1.0)		1.1 [0.9] (1.0)		1.2 [0.8] (1.0)	1.2 [0.8] (1.0)					Bottom slab
				0.9 (1.0)						1.2 (1.0)			Outer wall
				1.1 (1.0)		1.1 (1.0)			1.2 (1.0)				
	Variable situation for Level 1 earthquake ground motion			1.0 (–)		1.0 (–)					1.0 (–)		Outer wall
During construction	Variable situation for water pressure while afloat	0.9 (0.5)	1.1 (0.5)										Bottom slab
			1.1 (0.5)										Outer wall
	Variable situation for water pressure during construction											1.1 (0.5)	Partition wall

(b) Quaywalls

Situation	Design situation	Self weight	Hydrostatic pressure	Internal water pressure	Internal earth pressure	Bottom slab reaction	Surcharge	Dynamic water pressure	Bottom slab reaction during an earthquake	Loads during construction		Remarks
										Installation	Still water	
In service	Permanent situation for self weight	0.9 (1.0)	1.1 (1.0)			1.1 (1.0)	0.8 (0.5)					Bottom slab (surcharge is equivalent to bottom slab reaction component)
	Permanent situation for internal earth pressure			1.1 (1.0)	1.1 (1.0)							Outer wall
	Variable situation for Level 1 earthquake ground motion	1.0 (–)	1.0 (–)				1.0 (–)		1.0 (–)			Bottom slab (surcharge is equivalent to that during an earthquake)
				1.0 (–)	1.0 (–)			1.0 (–)				Outer wall
During construction	Variable situation for water pressure while afloat	0.9 (0.5)									1.1 (0.5)	Bottom slab while afloat
											1.1 (0.5)	Outer wall while afloat
	Variable situation for water pressure during construction									1.1 (0.5)		Partition wall during installation

② The actions used in performance verification of outer walls of breakwater caissons are shown in **Figs. 1.2.3** to **1.2.5**. The standard values of the load factors are shown in **Tables 1.2.2** to **1.2.4**.

(a) Front wall (parallel to faceline: seaside)

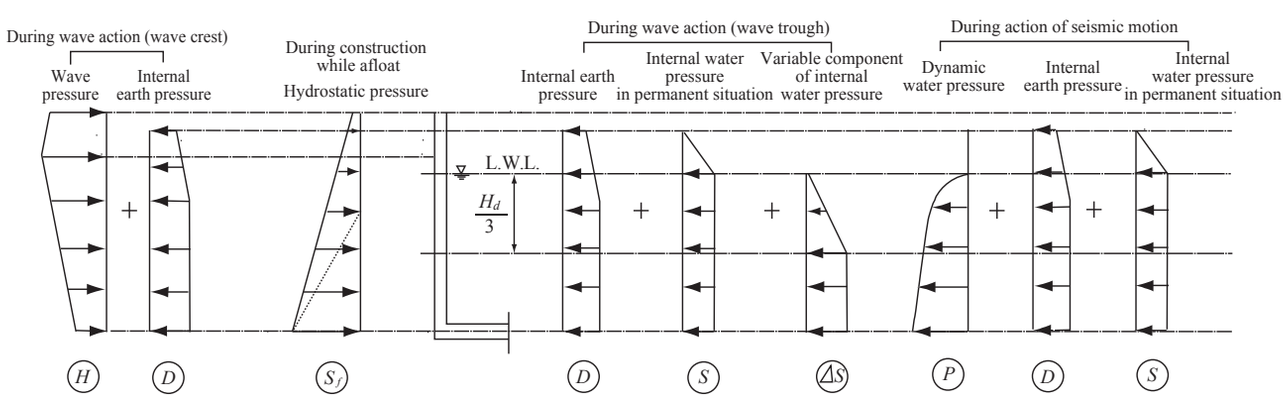

*In this figure, H_d stands for design wave height. In verification of the ultimate limit state, H_d=Hmax may be assumed.

Fig. 1.2.3 Actions on Front Wall (Breakwater)

Table 1.2.2 Combinations of Actions and Load Factors for Front Wall (Breakwater)

Design situation	Direction of action	Ultimate limit state	Serviceability limit state
Variable situation relevant to waves during action of wave crest	From outside	$1.2H-0.9D$	$1.0H-1.0D$
Variable situation relevant to water pressure while afloat during construction		$1.1S_f$	$0.5S_r$
Variable situation relevant to wave during action of wave trough	From inside	$1.1D+1.1S+1.2\Delta S$	$1.0D+1.0S+1.0\Delta S$
Variable situation relevant to Level 1 earthquake ground motion		$1.0D+1.0S+1.0P$	Not examined

* For the symbols in the table, see **Fig. 1.2.3**.

(b) Rear wall (parallel to face line : land side)

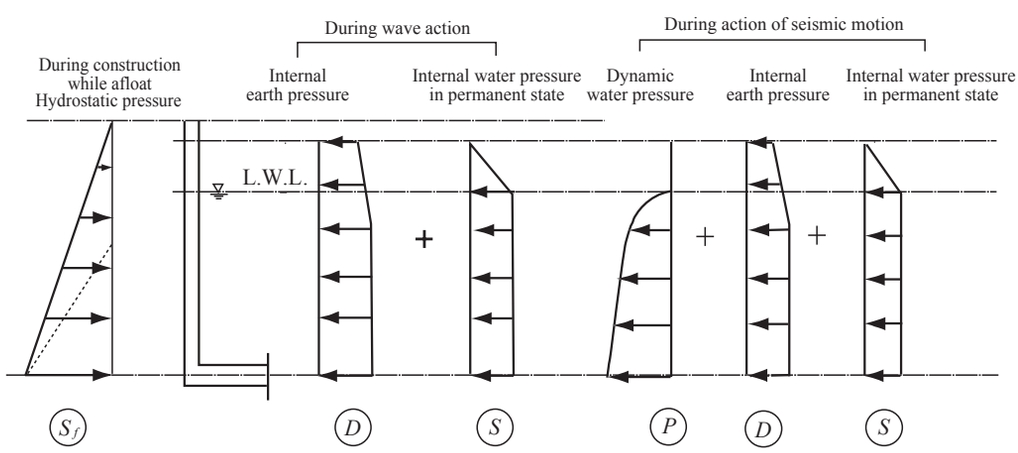

Fig. 1.2.4 Actions on Rear Wall (Breakwater)

Table 1.2.3 Combinations of Actions and Load Factors on Rear Wall (Breakwater)

Design situation	Direction of action	Ultimate limit state	Serviceability limit state
Variable situation relevant to water pressure while afloat during construction	From outside	$1.1S_f$	$0.5S_f$
Permanent situation relevant to internal earth pressure	From inside	Not examined	$1.0D+1.0S$
Variable situation relevant to Level 1 earthquake ground motion		$1.0D+1.0S+1.0P$	Not examined

* For the symbols in the table, see **Fig. 1.2.4**.

(c) Outer wall (direction perpendicular to face line)

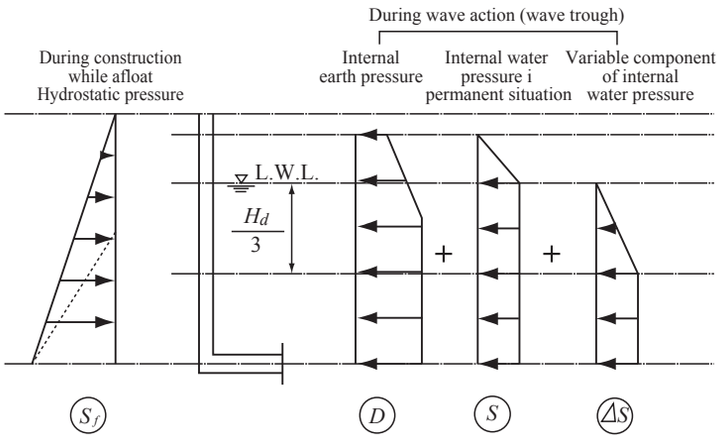

*In this figure, H_d stands for design wave height.

Fig. 1.2.5 Actions on Outer Wall (Breakwater)

Table 1.2.4 Combinations of Actions and Load Factors on Outer Wall (Breakwater)

Design situation	Direction of action	Ultimate limit state	Serviceability limit state
Variable situation relevant to water pressure while afloat during construction	From outside	$1.1S_f$	$0.5S_f$
Variable situation relevant to waves during action of wave trough	From inside	$1.1D+1.1S+1.2\Delta S$	$1.0D+1.0S+1.0\Delta S$

* For the symbols in the table, see **Fig. 1.2.5**.

③ The actions used in performance verification of the outer walls of quaywall caissons are shown in **Fig. 1.2.6**. The standard values of the load factors are shown in **Table 1.2.5**.

(a) Under calm conditions (actions from inside)

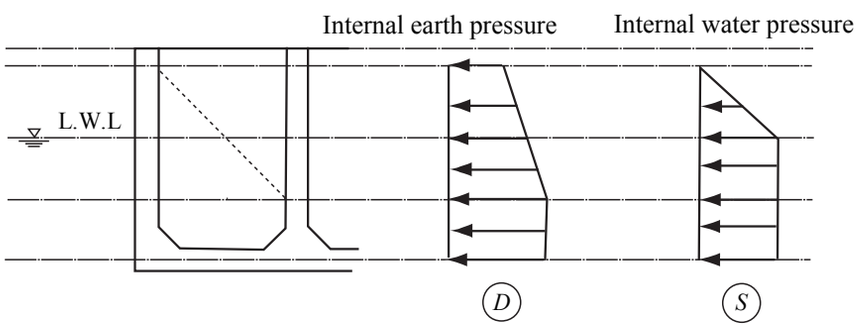

(b) While afloat (actions from outside)

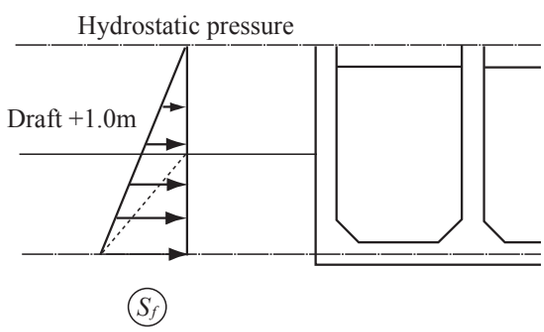

Fig. 1.2.6 (a) (b) Actions on Outer Wall (Quaywall)

(c) During action of ground motion (action to sea side)

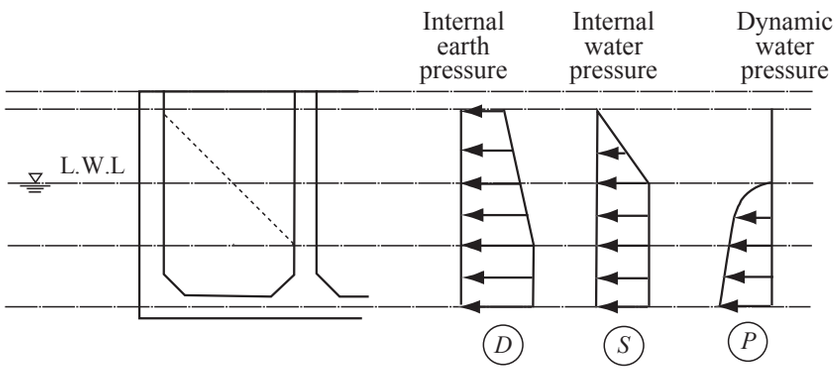

Fig. 1.2.6(c) Actions on Outer Wall (Quaywall)

Table 1.2.5 Combinations of Actions and Load Factors on Outer Wall (Quaywall)

Design situation	Direction of action	Ultimate limit state	Serviceability limit state
Variable situation relevant to water pressure while afloat during construction	Action from outside	$1.1S_f$	$0.5S_f$
Permanent situation relevant to internal earth pressure	Action from inside	Not examined	$1.0D+1.0S$
Variable situation relevant to Level 1 earthquake ground motion		$1.0D+1.0S+1.0P$	Not examined

* For the symbols in the table, see **Fig. 1.2.6**.

④ The actions used in performance verification of the stability of the bottom slab of breakwater caissons during construction can be obtained by multiplying the characteristic values of the actions by the load factors shown in **Table 1.2.1**. In verification of stability in service, values may be obtained using the equations shown in **Table 1.2.7**, considering the combination of actions shown in **Fig. 1.2.7**. The classification of actions is as shown in **Table 1.2.6**.

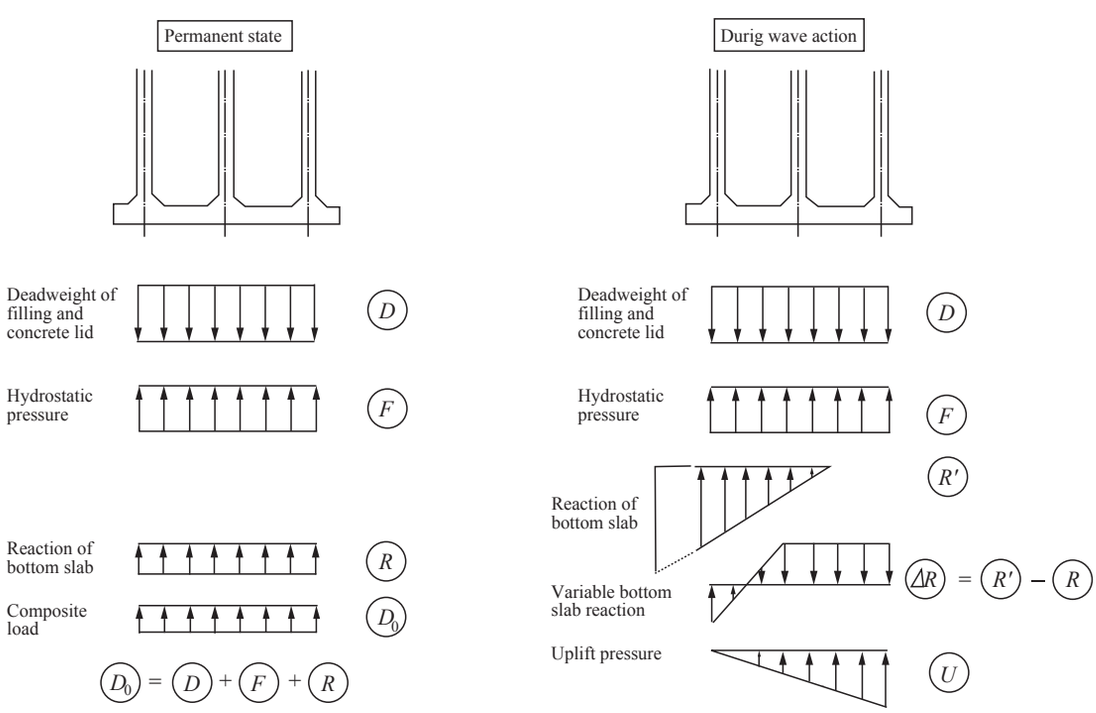

Fig. 1.2.7 Actions on Bottom Slab (Breakwater)

Table 1.2.6 Classification of Actions under Wave Action (Breakwater)

Class of action	Action
Permanent action	Composite load under calm conditions D_0
Variable action	Variable of bottom slab reaction ΔR, uplift pressure U

Table 1.2.7 Combination of Actions and Load Factors (Breakwater)

(a) Ultimate limit state

Design situation	Direction of ΔR and W		Combination of actions
Permanent situation	–		$0.9D_0+1.1F+1.1R$
Variable situation relevant to water pressure while afloat during construction	–		$0.9D_0+1.1F$
Variable situation relevant to waves during action of wave crest	ΔR ↑	W ↑	$1.1D_0+1.2\Delta R+1.2U$
	ΔR ↓	W ↑	$1.1D_0+0.8\Delta R+1.2U$
		W ↓	$0.9D_0+1.2\Delta R+0.8U$
Variable situation relevant to waves during action of wave trough	ΔR ↑	W ↑	$1.1D_0+1.2\Delta R+0.8U$
		W ↓	$0.9D_0+0.8\Delta R+1.2U$
	ΔR ↓	W ↑	$1.1D_0+0.8\Delta R+0.8U$
		W ↓	$0.9D_0+1.2\Delta R+1.2U$

(b) Serviceability limit state

Design situation	Combination of actions
Permanent situation	$1.1D_0+1.1F+1.0R$
Variable situation relevant to waves	$1.0D_0+1.0\Delta R+1.0U$

Provided, however, that assuming $W=D_0+\Delta R+U$, and each action is represented as the signed value (positive or negative). In the case of an action in the same direction as W, the value is positive, and in the case of an action in a direction opposite to W, the value is negative. The symbols in the table accord with those in **Fig. 1.2.7**.

Note) When variable of bottom slab reaction (ΔR) acts downwards, an upper limit is applied to the value of 1.2 $|\Delta R|$, which cannot exceed 1.1 $|R|$. Accordingly, if $1.2|\Delta R|>1.1|R|$, the combination of actions shall be as follows :
$0.9D_0+1.1|R|+0.8U$, or $0.9D_0+1.1|R|+0..8U+1.2U$

⑤ Actions used in performance verification of the stability of the bottom slab of quaywall caissons during construction can be obtained by multiplying the characteristic values of the actions by the load factors shown in **Table 1.2.1**. In verification of stability in service, values obtained using the equations shown in **Table 1.2.8** can be used, considering the combinations of actions shown in **Fig. 1.2.8**.

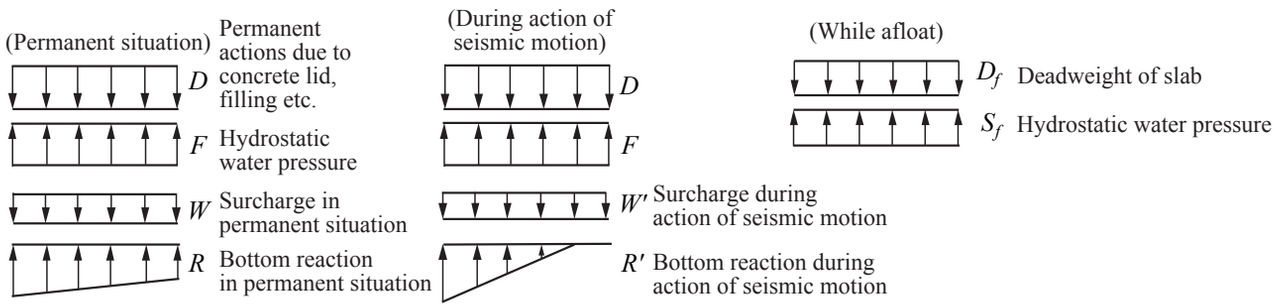

Permanent state: Situatiom in which surcharge is imposed.

Fig. 1.2.8 Actions on Bottom Slab (Quaywall)

Table 1.2.8 Combinations of Actions and Load Factors (Quaywall)

Design situation	Ultimate limit state	Serviceability limit state
Permanent situation	$1.1S_f$	$0.5S_f$
Variable situations relevant to Level 1 earthquake ground motion	$1.0D+1.0F+1.0R+1.0W$	Not examined
Variable situations relevant to water pressure while afloat during construction	$0.9D+1.1S_f$	$0.5D_r+0.5S_f$

* The symbols in the table accord with those in **Fig. 1.2.8.**

⑥ As the action used in performance verification of the stability of partition walls during construction works, the hydrostatic head difference between chambers during construction works (during installation) shall be generally used.

⑦ As the action used in performance verification of the stability of partition walls in service, the action in the state where extrusion force becomes the largest in the actions related to the bottom slab and actions related to the outer walls is generally used.

(3) The actions used in performance verification during fabrication of caissons may be set as follows.

① When a caisson is fabricated on a dry dock, floating dock etc., particular study of the actions during fabrication is not necessary. Provided, however, that when the caisson is raised with jacks to move on a slipway or caisson platform, or loaded on a launch truck, the self weight acts as a concentrated load.

② When examination is necessary during fabrication, examination may be performed considering the whole caisson to a simple beam.

(4) The actions used in performance verification while the caisson launches and is afloat may be set as follows.

① In cases where a dry dock or floating dock, or ordinary slipway (slipway and truck) is used, the hydrostatic pressure with an allowance added to the draft calculated as the action during launching and floating may be used. In cases where there is a danger that greater hydrostatic pressure may act on the caisson temporarily during launching, separate examination is necessary.

② The water pressure acting on outer walls may be considered as a load with a triangular distribution in which the base is the distance to the crown and height is the intensity of the hydrostatic water pressure (P_t) at the centerline of the bottom slab (see **Fig. 1.2.9**).

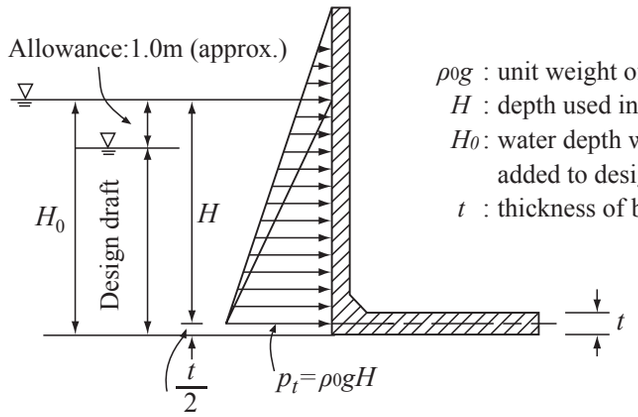

$\rho_0 g$: unit weight of sea water (kN/m3)
H : depth used in calculation of hydrostatic water pressure (m)
H_0 : water depth with an allowance of approximately 1.0m $H=H_0-t/2$ added to design draft (m)
t : thickness of bottom slab (m)

Fig. 1.2.9 Water Pressure Acting on Outer Wall

③ As the action on the bottom slab, the value obtained by subtracting the self weight of the bottom slab from the intensity of the hydrostatic pressure at the bottom edge of the bottom slab (ρ_w) shall be used. (see **Fig. 1.2.10**).

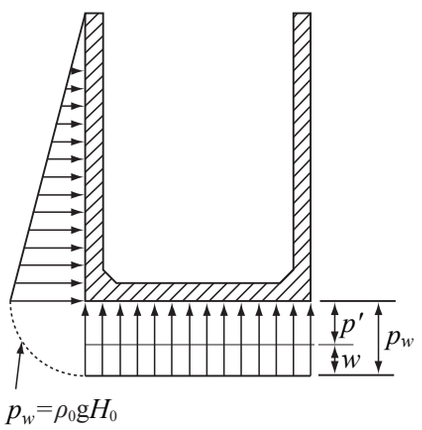

$p'=p_w-w=\rho_0 gH_0-w$
p' : action on bottom slab (kN/m^2)
p_w : hydrostatic pressure acting on bottom slab considering an allowance of approximately 1.0m in design draft (kN/m^2)
w : selfweight of bottom slab (kN/m^2)
$\rho_0 g$: unit weight of sea water (kN/m^3)
H_0 : length with allowance of approximately 1.0m added to design draft (m)

Fig. 1.2.10 Actions on Bottom Slab

(5) Actions used in performance verification of caissons during installation may be set as follows.

① In the case of the outer walls and bottom slab, performance verification of the outer walls and bottom slab during installation may be omitted, because it is clear that the actions while afloat and in service are larger than those during installation.

② Water pressure caused by the hydrostatic head difference between chambers shall be applied to the partition walls, considering construction conditions.

(6) Actions used in performance verification of caissons in service may be set as follows.

① As actions on the outer walls, internal earth pressure and internal water pressure shall be considered. In the outer walls of breakwater caissons, the influence of the action of waves shall also be considered. In addition to the actions of waves, breakwaters covered with wave-dissipating blocks are also affected by the impact of the wave-dissipating blocks against the front wall, and depending on the region, by the impact force of drift ice, driftwood, etc., freezing, and other factors. Therefore, when these influences are remarkable, they must be considered as actions.

② Internal earth pressure

(a) In many cases, the distribution of internal earth pressure takes an irregular shape. For design purpose, however, this distribution can be converted to an appropriate equivalent uniform distribution load or triangular distribution load.

(b) In the case where sand is used as the filling, the coefficient of earth pressure at rest K can be set at 0.6. Provided, however, that the earth pressure may be disregarded when the filling consists of blocks or concrete.

(c) It can be assumed that earth pressure increases to the depth equal to the width *b* of the wall, but does not increase beyond that. (see **Fig. 1.2.11**).

In cases where strong cast-in-place concrete is located on top of caissons and it can be regarded that the effect of the surcharge does not reach the interior of the caisson, the surcharge may be disregarded. Provided, however, that the self weight of the cast-in-place concrete shall be taken into account.

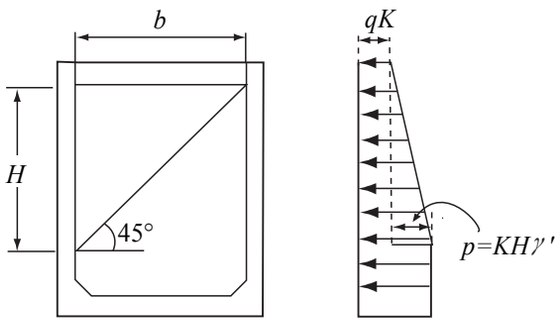

Fig. 1.2.11 Earth Pressure of Filling

③ Internal Water Pressure

The internal water pressure shall be the head difference between the water level in the caisson and the lowest water level (L.W.L.). However, when verifying the front wall of a breakwater or outer wall perpendicular to the face line, as shown in **Fig. 1.2.12(a),** in case of wave troughs acting on the walls L.W.L. – (H_{max})/3 can be used as the external water level. In the case where the wave crests act on the surface of the front wall, internal water pressure may be disregarded. For the rear wall, L.W.L. can be used as the external water level, as shown in **Fig. 1.2.12(b)**.

④ For the front walls of the breakwater caissons, wave force shall be taken into account when wave crests act on the walls.[11), 12)]

⑤ Determination of the internal earth pressure and internal water pressure by structural member is as shown in **Fig. 1.2.12**.

(a) Breakwaters (front wall and outer walls perpendicular to face line)

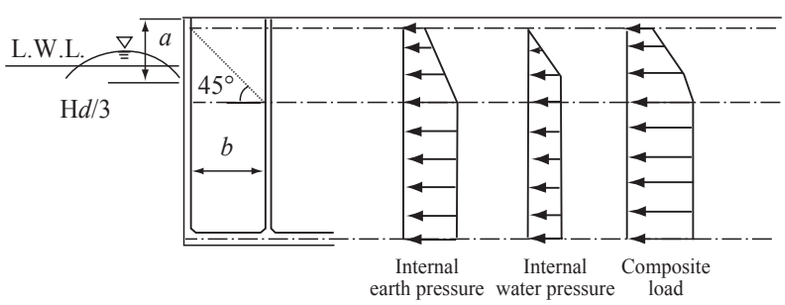

*In this figure, H_d stands for design wave height.
In verification of the ultimate design situation, it can be assumed the H_d=H_{max}

(b) Breakwaters (rear wall)

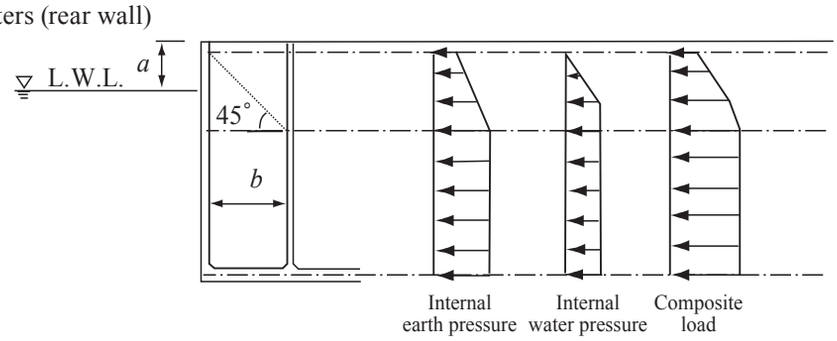

(c) Quaywalls (front wall, rear wall, and outer walls perpendicular to face line)

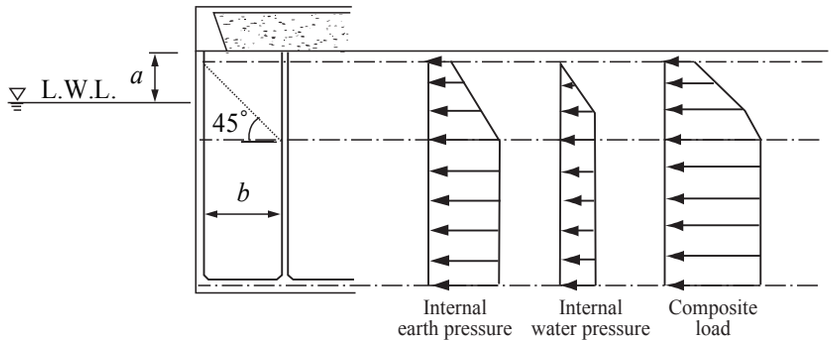

Fig. 1.2.12(a)-(c) Determination of Internal Earth Pressure and Internal Water Pressure

(d) Actions of waves

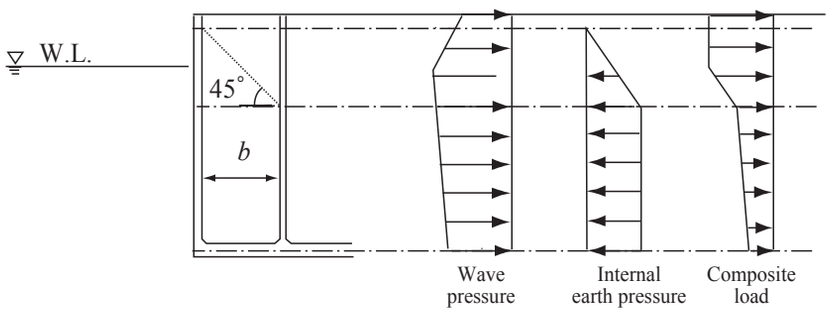

Fig. 1.2.12(d) Determination of Internal Earth Pressure and Internal Water Pressure

(7) Actions used in performance verification of the bottom slab may be set as follows.

① In fixed parts surrounded by outer walls and partition walls, the bottom reaction, hydrostatic pressure, uplift pressure, weight of the filling, weight of the concrete lid, weight of the bottom slab, and surcharge shall be taken into account.

② The distribution of the composite action often takes an irregular shape. For design purpose however, this distribution can be modified as an appropriate uniform distribution action or triangular distribution action.

③ The bottom reaction acting on the body or wall can be calculated according to equations (**1.2.6**) and (**1.2.7**) (see **Fig. 1.2.13**).

(a) In the case of $e \le \frac{1}{6}b$

$$\left.\begin{aligned} p_1 &= \left(1+\frac{6e}{b}\right)\frac{V}{b} \\ p_2 &= \left(1-\frac{6e}{b}\right)\frac{V}{b} \end{aligned}\right\} \tag{1.2.6}$$

(b) In the case of $e > \frac{1}{6}b$

$$\left.\begin{aligned} p_1 &= \frac{2}{3}\frac{V}{\left(\frac{b}{2}-e\right)} \\ b' &= 3\left(\frac{b}{2}-e\right) \end{aligned}\right\} \tag{1.2.7}$$

The value of e can be calculated using equation (**1.2.8**).

$$\left.\begin{aligned} e &= \frac{b}{2} - x \\ x &= \frac{M_w - M_h}{V} \end{aligned}\right\} \qquad (1.2.8)$$

where

p_1 : characteristic value of reaction at front toe (kN/m^2)
p_2 : characteristic value of reaction at rear toe (kN/m^2)
V : characteristic value of vertical resultant force per unit length in direction of caisson face line (kN/m)
H : characteristic value of horizontal resultant force per unit length in direction of caisson face line (kN/m)
e : eccentricity of total resultant force (m)
b : width of bottom (m)
b' : action width of bottom reaction in the case of $e > \frac{1}{6}b$ (m)

M_w : characteristic value of moment revolving point A by vertical resultant force (kN•m/m)
M_h : characteristic value of moment revolving point A by horizontal resultant force (kN•m/m)

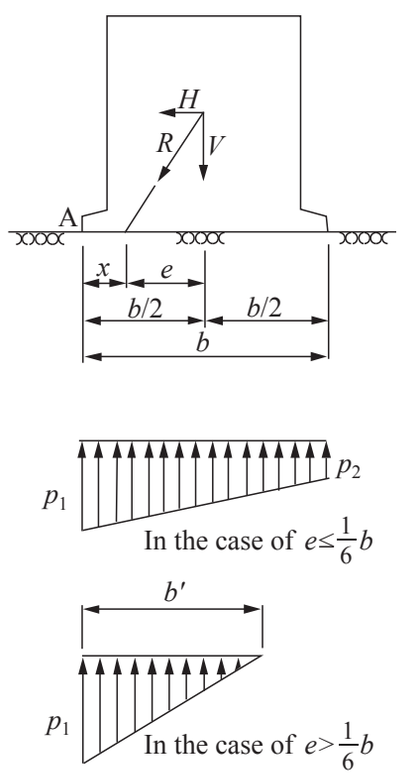

Fig. 1.2.13 Bottom Reaction

④ Hydrostatic pressure shall be the water pressure acting on the bottom slab at the design tide level.

⑤ Uplift pressure shall be taken into account in cases where waves act on the body or wall. For calculating uplift pressure, **Part II, Chapter 2, 4.7 Wave Pressure and Wave Force** may be used as a reference.

⑥ The specific weight of the filling material is normally determined by testing the material to be used.

⑦ The weight of the concrete lid and bottom slab shall be the weight in air without influence of buoyancy.

⑧ The weight of soil on top of the caisson and superimposed load etc. are taken into account for the surcharge acting on the bottom slab. Provided, however, that the surcharge may be disregarded in case where cast-in-place concrete is placed on top of the caisson and in can be regarded that the influence of the surcharge does not reach the interior of the caisson.

(8) Actions used in performance verification of footings can be set as follows.

① The bottom reaction, weight of the footing (accounting buoyancy), and surcharge on the footing shall be taken into account.

② Actions may be set considering the distributions shown in **Fig. 1.2.14**.

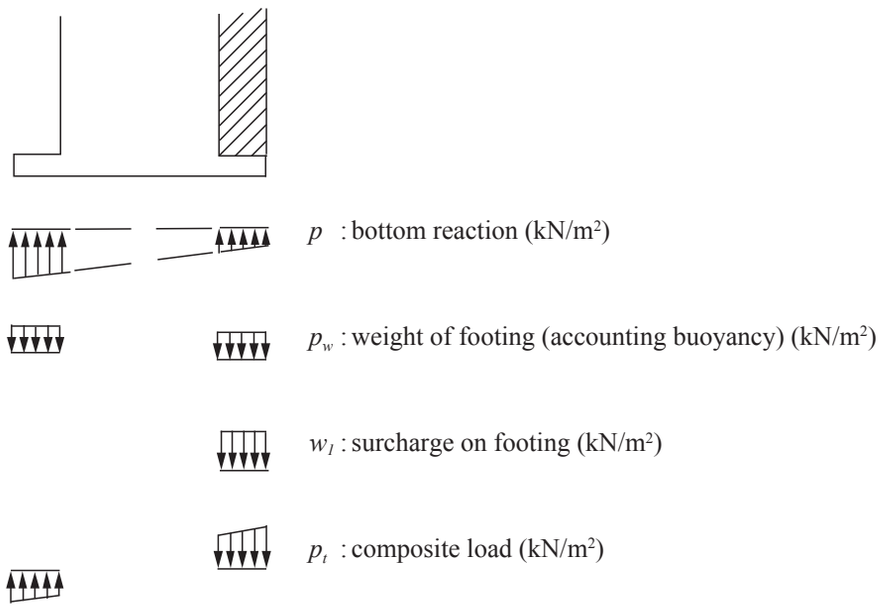

Fig. 1.2.14 Actions on Footings

③ For the bottom reaction acting on the footing, the values calculated using equations (**1.2.6**) or (**1.2.7**) can be used.

④ The weight of the footing shall be the submerged weight accounting buoyancy.

⑤ The surcharge acting on the footing shall consider the weight of the wave-dissipating blocks of breakwaters etc., accounting buoyancy below the design water level, and the weight of overburden soil, the superimposed loads etc., on the land side of quaywalls.

(9) The actions used in performance verification of partition walls can be set as follows.

① In performance verification of extrusion of outer walls from partition walls, the internal earth pressure and internal water pressure acting on the outer wall shall be considered. It may be assumed that these actions act on the joint between the partition wall and the outer wall (see **Fig. 1.2.15**).

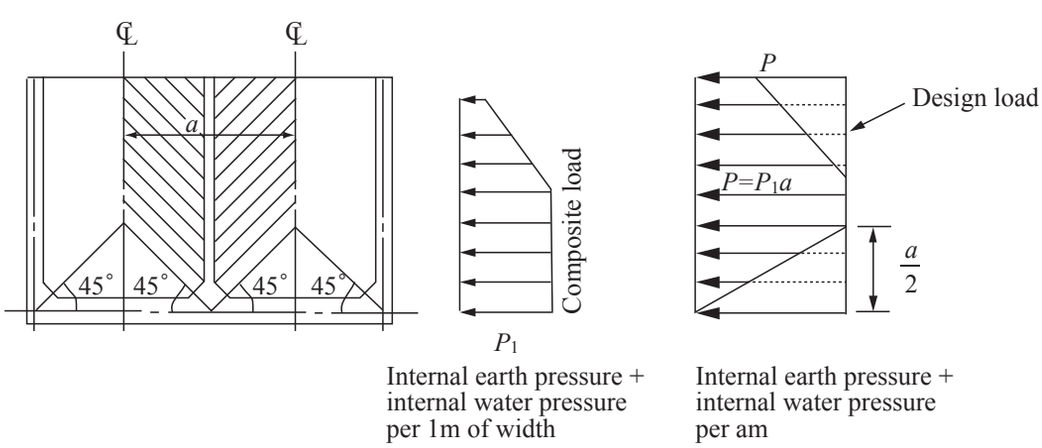

Fig. 1.2.15 Actions Used in Examination of Extrusion of Outer Wall from Partition Wall

② In verification of extrusion of the bottom slab from the partition wall, the weight of the filling material acting on the bottom slab, the surcharge, the weight of the bottom slab, the weight of the concrete lid, the bottom reaction, the uplift pressure, and the hydrostatic pressure shall be taken into account. It may be assumed that these actions act on the joint between the partition wall and the bottom slab (see **Fig. 1.2.16**).

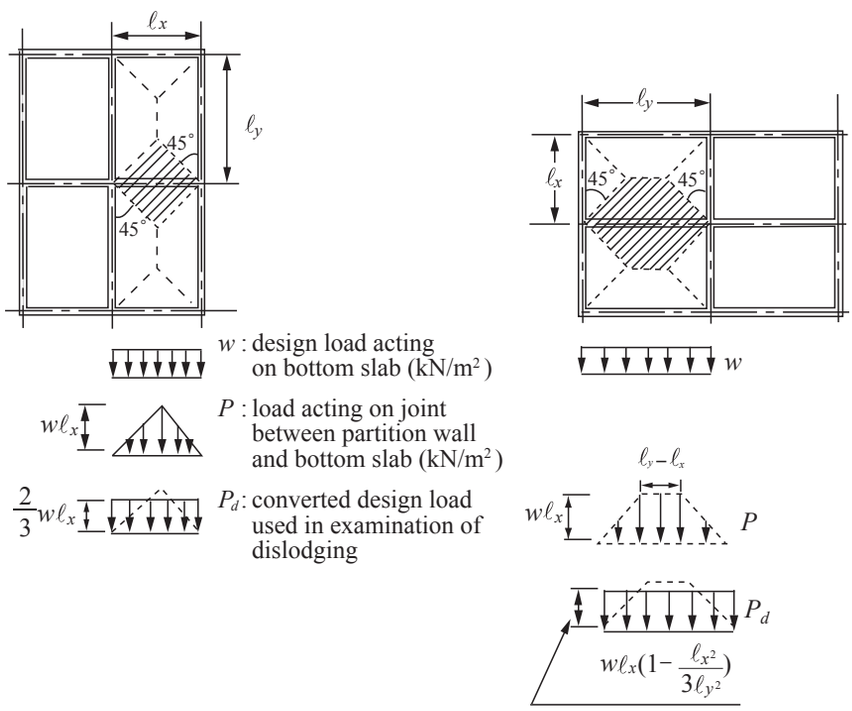

Fig. 1.2.16 Actions used in Examination of Extrusion of Bottom Slab from Partition Wall

③ In cases where there is a possibility of actions due to non-uniform ground bearing capacity or similar factors, this shall be examined. In this case, verification of the individual members of the caisson shall be performed assuming a cantilever beam with a span equivalent to 1/3 of the length or width of the caisson (see **Fig. 1.2.17**). Verification may also be performed using a structural analysis model in which only the parts of the ground which can be expected to provide bearing support are converted to springs.

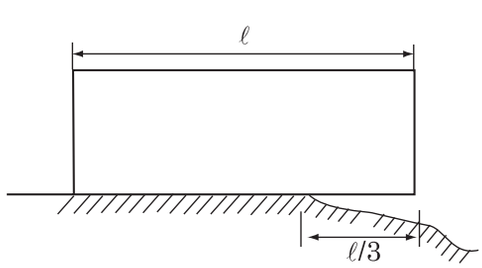

Fig. 1.2.17 Examination of Action due to Non-uniformity of Ground Bearing Capacity

④ The standard load factors of actions considered in verification of partition walls are shown in **Table 1.2.9**.

Table 1.2.9 Combinations of Actions and Load Factors

Design situation	Direction of action	Ultimate limit state	Serviceability limit state
Variable situation relevant to water pressure during installation during construction	Direction of action due to hydrostatic head between compartments	1.1S_f	0.5S_f
Permanent situation relevant to internal earth pressure	Direction of extrusion of outer wall from partition wall	Maximum outward design load by acting on outer wall	Not examined
Permanent situation relevant to self weight Variable situation relevant to waves Variable situation relevant to Level 1 earthquake ground motion	Direction of extrusion of bottom slab from partition wall	Maximum downward design load by acting on bottom slab	Not examined

1.2.4 Performance Verification

(1) Performance verification of structural members can be performed using the method presented in **1.1 General**.

① Performance verification of structural members shall be performed by correlating the performance criteria with the ultimate state for the respective members. Specifically, examination is performed by setting the verification indexes for the corresponding ultimate states for the actions on the members calculated using the procedure presented in **1.2.3 Actions**. The settings of the verification indexes are based on **1 Structural Members**. The partial factors used in this case may generally be set based on **Table 1.1.3** in **1.1.6 Partial Factors**.

(2) Performance verification of partition walls can be performed as follows.

① During installation, the partition wall can be regarded as comprising a slab with 3 fixed sides and 1 free side.

② The span used in calculations shall be the interval between the centers of walls.

(3) Performance verification of the bottom slab and footing can be performed as follows.

① The part of the bottom slab surrounded by the outer walls and partition walls can be regarded as a 4 sided fixed slab.

② The span used in calculation of the part having 4 fixed sides shall be the central interval between the center of the walls.

③ The cross section used in calculations in connection with bending and shearing of the footing shall be the front surface of the wall. Provided, however, that the cross section used in examination of diagonal tensile type shear failure may be assumed to be the cross section at the front face of the wall. In this case, in calculations of the height of members at the front face of the wall, the part of the haunch with a gradient shallower than 1 : 3 shall be considered effective.

④ In the case of reinforced concrete footings of normal dimensions, the caisson body is assumed to be rigid; therefore, it may be considered that the moment occurring in the footing does not reach the main body of caisson.

(4) Other Structural Members
In performance verification of structural members which are not described in this section, such as the slit members of slit caissons, the methods of verification for structural members shall be applied correspondingly, considering the dimensions of the structural member and the characteristics of the actions etc.

(5) Others

① In the case of quaywall caissons, in principle, verification of the fatigue limit state may be omitted.

② In cases where a caisson is lifted with jacks for transportation or uneven settlement occurs after installation, verification may be performed considering the entire caisson as a beam. In this case verification for punching shear failure of the bottom slab is necessary.

1.3 L-shaped Blocks

Public Notice

Performance Criteria of L-shape blocks

Article 24

The performance criteria of a reinforced concrete L-shaped block (hereinafter called "L-shaped block" in this article) shall be set such that the risk of impairing the integrity of the front wall, bottom slab, buttress wall, and footing of the L-shaped block is equal to or less than the threshold level under the permanent action situation in which the dominant actions are self weight and earth pressure and under the variable action situations in which the dominant actions are Level 1 earthquake ground motions and variable waves in consideration of the type of facilities.

[Commentary]

(1) Performance Criteria of L-shaped Blocks

① The performance criteria of L-shaped blocks, shall follow the provision shown in **1.2 Caissons** regarding the performance criteria and the setting of design situation (excluding accidental situations) of caissons. Provided, however, that "outer wall," "partition wall," and "internal earth pressure" shall be replaced with "front wall," "buttress wall," and "earth pressure," respectively, and the provisions in connection with flotation and installation shall be excluded. In addition to these provisions, the performance criteria and the settings of design situations (excluding accidental situations) of L-shaped blocks shall be as shown in **Attached Table 10**.

Attached Table 10 Performance Criteria and Settings of Design Situations (excluding accidental situations) of L-shaped Block

Ministerial Ordinance			Public Notice			Performance requirements	Design situation			Verification item	Index of standard limit value
Article	Paragraph	Item	Article	Paragraph	Item		Situation	Dominating action	Non-dominating action		
7	1	–	24	1	–	Serviceability	Permanent	Earth pressure	Water pressure, reaction of bearing part of front wall, reaction of bearing part of bottom slab	Extrusion of bottom slab from buttress wall (yielding of reinforcing bars)	Design yield stress
							Variable	Level 1 earthquake ground motion	Self weight, earth pressure, water pressure, reaction of bearing part of front wall, reaction of bearing part of bottom slab	Extrusion of front wall from buttress wall (yielding of reinforcing bars)	Design yield stress

② Extrusion of bottom slab or front wall from buttress wall (yielding of reinforcing bars)

Verification of extrusion of the bottom slab or front wall from the buttress wall (yielding of reinforcing bars) means to verify that the risk that the tensile stress of the reinforcing bars due to extrusion of the bottom slab or front wall from the buttress wall will exceed the design yield stress is less than the limit value.

[Technical Note]

1.3.1 Fundamentals of Performance Verification

(1) The description in this section can be applied to the performance verification of ordinary L-shaped blocks.

(2) An example of the performance verification procedure for L-shaped blocks is shown in **Fig. 1.3.1**.

(3) In performance verification of L-shaped blocks, **1.2 Caissons** and **Technical Manual for L-shape Block Quaywalls** [17] may be used as a reference.

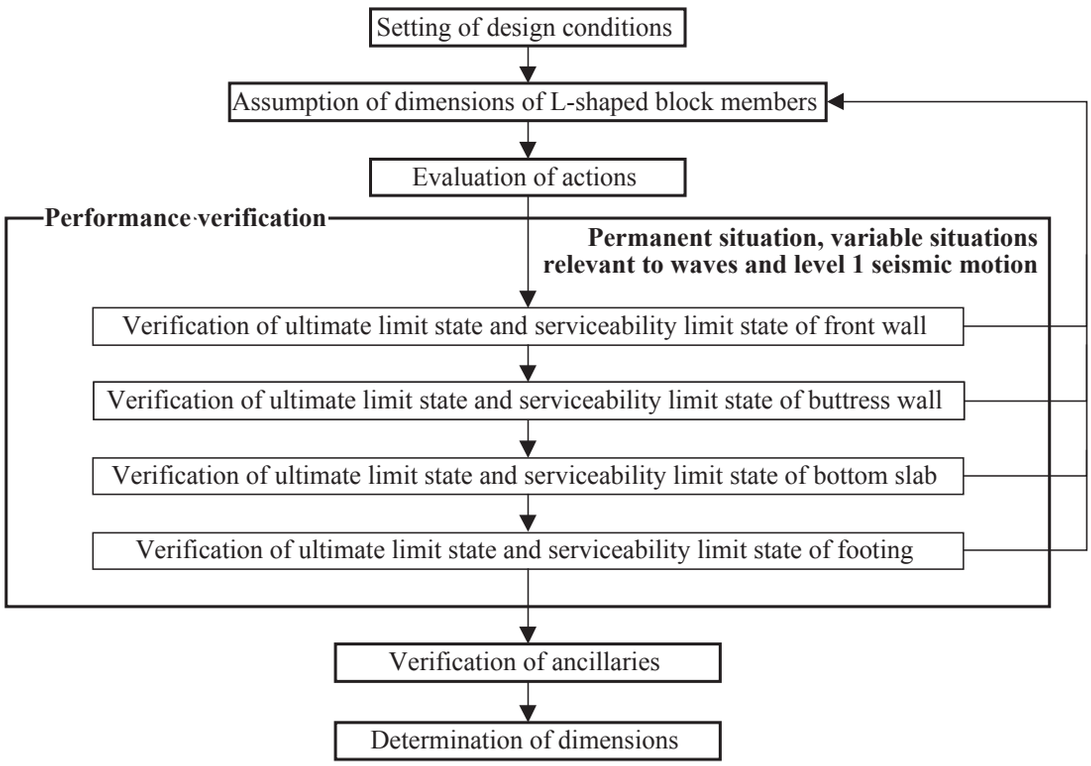

*1: For the high earthquake-proof facilities and the facilities of which damage is expected to have a serious impact on human life, property, and social activity, it is preferable to perform verification for accidental situations, as necessary.

Fig. 1.3.1 Example of Performance Verification Procedure for L-shaped Blocks

1.3.2 Determination of Basic Cross Section and Characteristic Values

(1) It is desirable that the dimensions of the members of L-shaped blocks be determined considering the following items :

① Capacity of facilities for fabricating L-shaped blocks

② Hoisting capacity of crane

③ Water depth in which L-shaped blocks are to be installed (mound water depth)

④ Tidal range

⑤ Working conditions after installation of L-shaped blocks (backfilling and superstructure construction)

(2) The wall height of L-shaped blocks should be determined so that the superstructure may be easily constructed, considering the water depth at the front face and the tidal range when the L-shaped blocks form the quaywall main body.

1.3.3 Actions

(1) In evaluation of actions, **1.2.3 Actions** can be used as a reference.

(2) Actions on the members of L-shaped blocks can be considered as shown in **Fig. 1.3.2**.

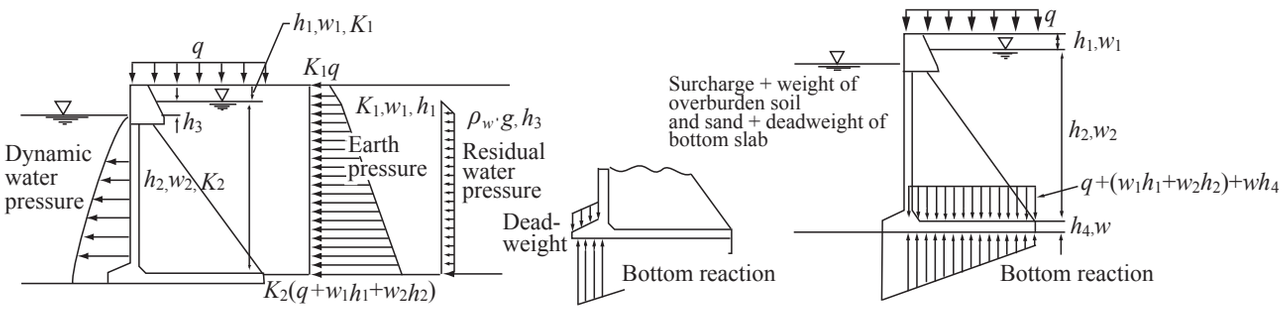

(a) Actions on front wall and buttress wall (b) Actions on footing (c) Actions on bottom slab

where

q : load (kN/m^2)
γ_1 : unit weight of soil above residual water level (kN/m^3)
γ_2 : unit weight of soil below residual water level (kN/m^3)
$\rho_w g$: unit weight of sea water (kN/m^3)
p_{dw} : dynamic water pressure during action of ground motion (kN/m^2)
h_1 : thickness of soil layer of soil above residual water level (m)
h_2 : thickness of soil layer of soil below residual water level (m)
h_3 : tidal range (m)
h_4 : thickness of bottom slab (m)
K_1 : coefficient of earth pressure of soil above residual water level
K_2 : coefficient of earth pressure of soil below residual water level
w_1 : weight of soil above residual water level (kN/m^2)
w_2 : weight of soil below residual water level (kN/m^2)
w_4 : self weight of bottom slab (kN/m^2)

Fig. 1.3.2 Actions for L-shaped Blocks

(3) In calculating earth pressure, **Part II, Chapter 5, 1 Earth Pressure** can be used as a reference. For the friction angle on the wall at the virtual back face, the angle of shear resistance of the backfill material at the virtual back face can be used.[17)]

(4) In calculating bottom resistance, **1.2.3 Actions (6)** can be used as a reference.

(5) In the concrete placing method of L-shaped block fabrication, there are cases in which the wall is constructed in the vertical direction and cases in which the wall is constructed by laying in the horizontal direction. In cases where the wall is constructed by laying in horizontally, construction is accompanied by work in which the blocks are raised before installation; therefore, in performance verifications, it is necessary to study the actions at the block raising stage.

(6) In general, the actions on L-shaped blocks are not distributed uniformly. However, the non-conformity distributed actions may be considered to be a combination of appropriately divided loads of uniform distribution. Provided, however, that it should be avoided that the combination of divided loads causes weak points in the member strength. Examples of the division of loads are shown in **Fig. 1.3.3**.

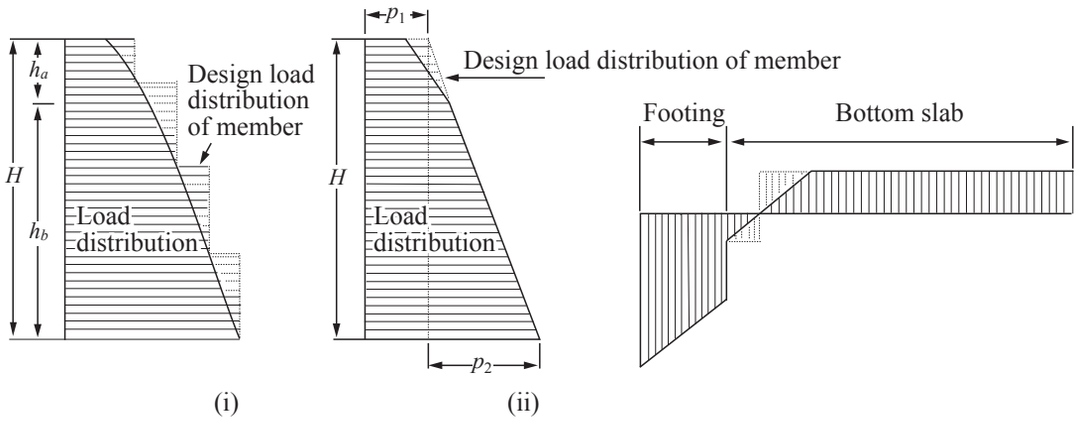

(a) Earth pressure (b) External forces acting on footing and bottom slab

Fig. 1.3.3 Example of Method of Load Distribution

1.3.4 Performance Verification

(1) Front Wall

① Performance verification of the front wall can generally be performed assuming that a slab is supported by buttress walls.

② In the case of one buttress wall, performance verification can be performed assuming that a cantilever slab is supported by the buttress. In case of two or more buttresses, it is assumed that the front wall is a continuous slab supported by the buttresses.

③ The span of the front wall may be measured from the center of the buttress .

④ Actions from rear of the front wall can be regarded as acting on the entire length of the member.

⑤ The width of the front wall and the actions on the wall can be considered as shown in **Fig. 1.3.4**.

⑥ Structurally, the front wall is supported by the bottom slab as well as by the buttresses. Therefore, the front wall may be regarded as a slab which is supported on 2 or 3 sides. However, in general, the front walls of L-shaped blocks with large heights, are lightly affected by the part supported by the bottom slab, and the arrangement of reinforcing bars at the bottom slab attachment becomes complex. Considering these facts, performance verification can generally be performed assuming that the front wall is a cantilever slab or a continuous slab.

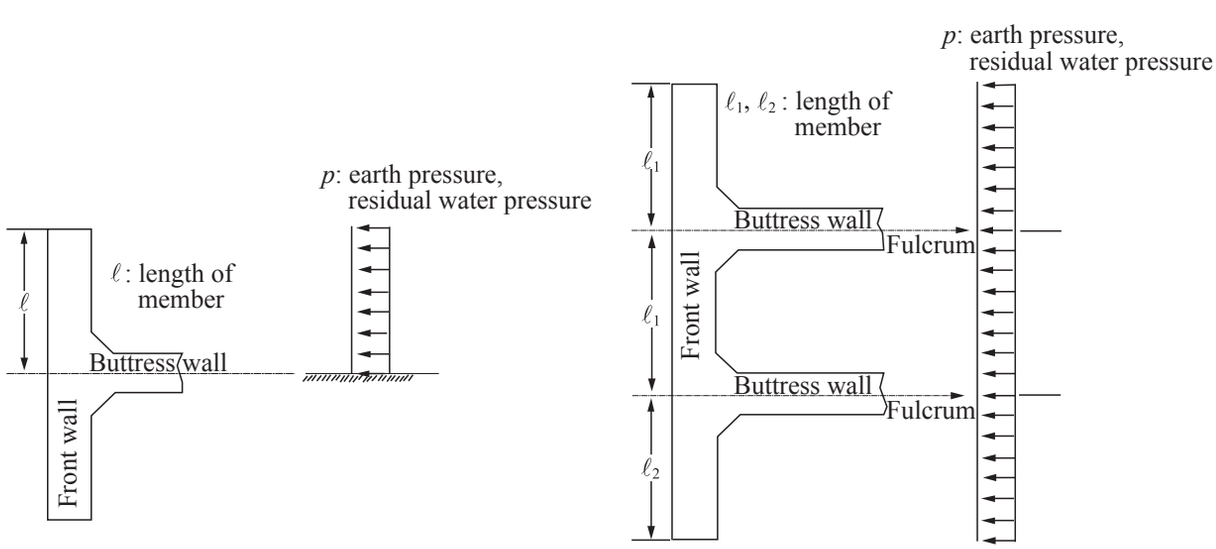

(a) When supported by one buttress wall (b) When supported by two buttress walls

Fig. 1.3.4 Length of Front Wall Members and Actions on Front Wall

(2) Footing

① Performance verification of the footing can be performed assuming that a footing is regarded as a cantilever slab supported by the position of the front wall.

② The length of the footing may be regarded as the distance between the front edge of the footing and the front face of the front wall.

③ The length of the footing and the actions on the footing can be considered as shown in **Fig. 1.3.5**.

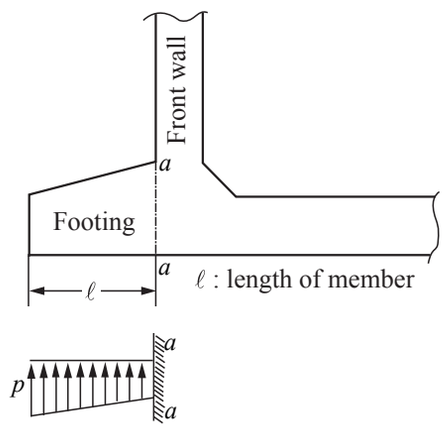

p = (bottom reaction) – (deadweight of footing)

Fig. 1.3.5 Length of Footing and Actions on Footing

(3) Bottom Slab

① Performance verification of the bottom slab can generally be performed assuming that the bottom slab is supported by the buttresses. In the case of one buttress, the bottom slab can be treated as a cantilever slab supported by the buttress, and in case of two or more buttresses, as a continuous slab.

② The length of the bottom slab may be regarded as the distance between the centers of the buttresses.

③ Actions from the top side of the bottom slab can generally be regarded as acting on the entire length of the member.

④ The bottom slab may be regarded as a structure supported by the front wall as well as by the buttresses. Therefore, performance verification of the bottom slab may be performed assuming that the bottom slab is supported on 2 or 3 sides. However, for the same reason as stated in **(1)**, verification may generally be performed assuming that the bottom slab is a cantilever slab or a continuous slab. Accordingly, in the cases where it is advantageous in performance verification to consider the bottom slab as a slab supported on 2 or 3 sides, ① does not necessarily apply.

⑤ Of the actions on the bottom slab, the bottom reaction acts on the entire length of the member. The action from the top of the bottom slab which is transmitted by backfilling can be considered as acting on the clear span of the bottom slab. However, because this type of calculation is troublesome and this does not have a large effect on performance verification, the action on the bottom slab may generally be applied on the entire length of the member.

⑥ In performance verification of the bottom slab, it is necessary to set the load factor considering the load under which members are at the greatest risk. For load factors used in performance verification, **Technical Manual for L-shaped Block Quaywalls** [17] may be used as a reference.

(4) Buttress wall

① Performance verification for buttress walls can be performed assuming that the buttress wall is a T-beam integrated with the front wall.

② Buttress walls may be examined by consideration as a cantilever beam supported at the bottom slab against the reaction from the front wall.

③ Performance verification of buttress walls shall be performed for the cross sections parallel to the bottom slab.

④ The buttress wall, front wall, and bottom slab shall be tightly connected. The amount of reinforcing bars for this purpose shall be calculated independently from that of stirrups against shear stresses.

⑤ When performance verification of the front wall and bottom slab follows the description given here, actions from behind the buttress walls may be disregarded.

⑥ The length of members of buttress walls can be considered to be the total height including the bottom slab, as shown in **Fig. 1.3.6**. Provided, however, that it is necessary to consider that actions work on the superstructure as well as the buttress.

⑦ When the cross section is calculated assuming that the buttress wall is a T-beam, attention shall be paid to the position of the neutral axis which is located either in the front wall or in the buttress wall.

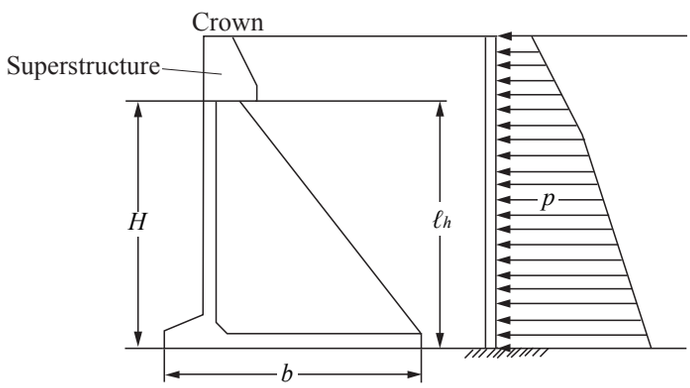

where

p : sum of earth pressure and residual water pressure (kN/m^2)
ℓ_h : length of buttress members (m)
b : width of block (m)
H : height of block (m)

Fig. 1.3.6 Length of Buttress Members and Actions on Buttress Wall

1.4 Cellular Blocks

Public Notice

Performance Criteria for Cellular Blocks

Article 25
The provisions of Article 23 shall apply correspondingly to the performance criteria of cellular blocks of reinforced concrete construction.

[Technical Note]

1.4.1 Fundamentals of Performance Verification

(1) The description in this section can be applied to the performance verification of ordinary cellular blocks.

(2) An example of the performance verification procedure for cellular blocks is shown in **Fig. 1.4.1**.

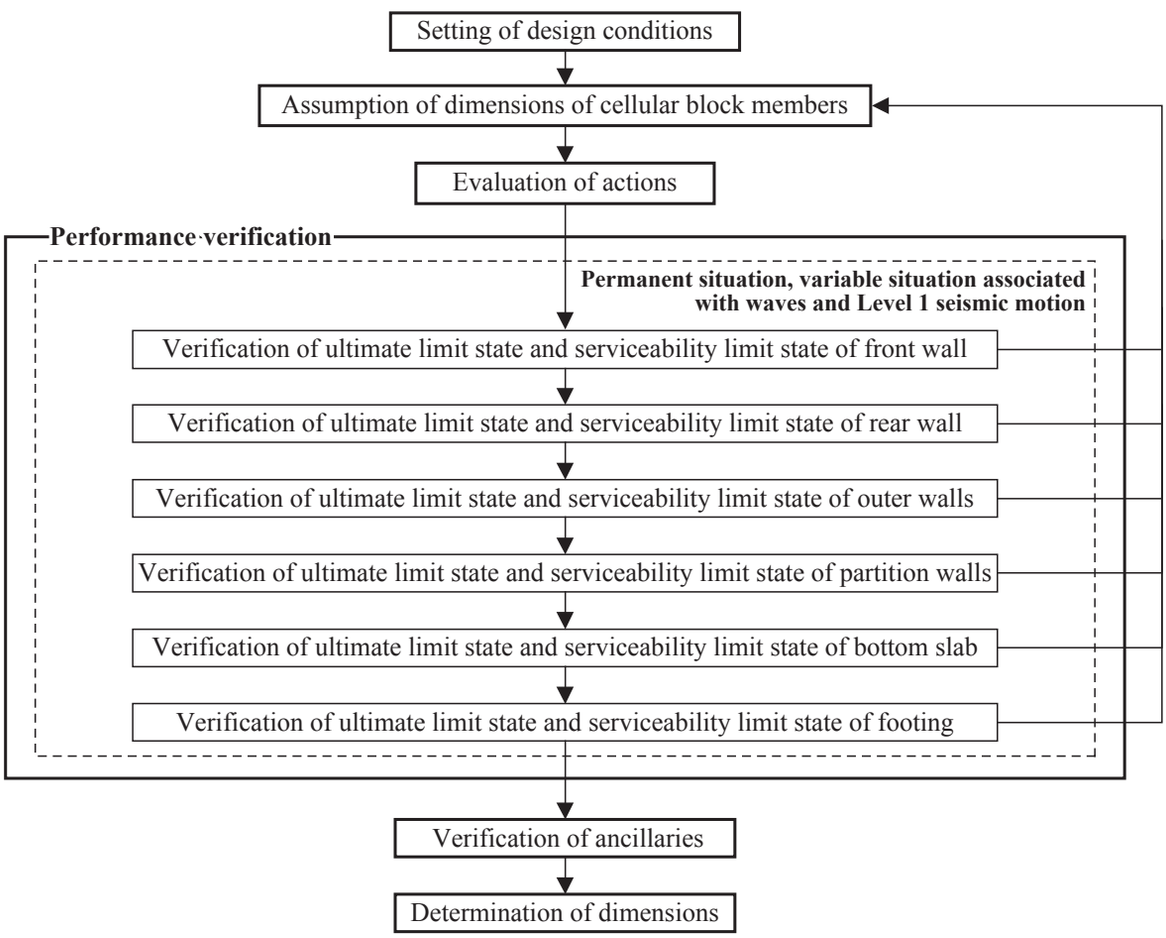

*1: In outer walls which are not affected by waves, verification may be limited to the serviceability limit state.
*2: In the high earthquake-resistance facilities and facilities in which serious impact on human life, property, and social activity due to damage of the objective facilities can be expected, it is preferable to perform verification for the accidental situations, as necessary. Verification of accidental situations associated with waves shall be performed in cases where facilities which handle hazardous materials are located immediately behind the structure, and damage to the facilities can be expected to have a serious impact.

Fig. 1.4.1 Example of Performance Verification Procedure for Cellular Blocks

(3) In performance verification of cellular blocks, the performance verification in **1 Structural Members** may be used as a reference.

(4) Because cellular blocks have various types, in individual performance verification, **1.2 Caissons** and **1.3 L-shaped Blocks** may be used as a reference, corresponding to the structural type.
When cellular blocks are to be used as members of breakwaters or breakwater revetments or other structures subject to the action of wave force, the fatigue limit state should be studied separately.

(5) "Cellular blocks" generally refer to blocks consisting of outer walls without a bottom slab. Cellular blocks function as a wall body either in single units or multiple piled-up blocks. As a special type, cellular blocks with a bottom slab are also used. In actual performance verification, it is necessary to adopt an appropriate method based on an adequate understanding of the characteristics of the block shape.

(6) The cross-sectional shapes of cellular blocks have various types. The cross-sectional shapes of blocks which are commonly used in relating large numbers are shown in **Fig. 1.4.2**.

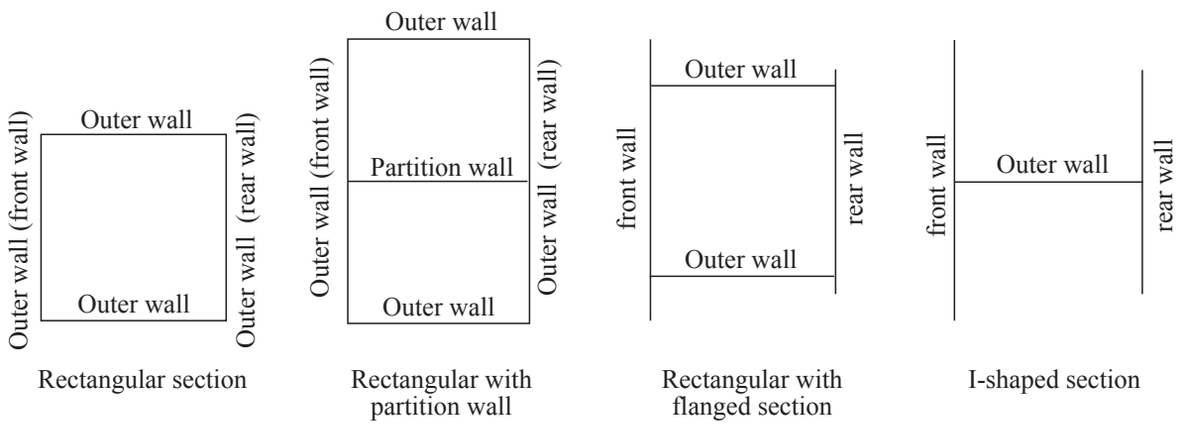

Fig. 1.4.2 Examples of Cross-sectional Shapes of Cellular Blocks (schematic diagrams)

1.4.2 Setting of Basic Cross Section and Characteristic Values

(1) The dimensions of the members of cellular blocks shall be set considering the following items :

① Capability of the facilities for fabricating cellular blocks
② Hoisting capacity of crane
③ Water depth at the location where cellular blocks are to be installed
④ Tidal range
⑤ Work conditions after installation of cellular blocks (backfilling, superstructure construction)
⑥ Formation of a mutually integrated block structure when piled-up in stages

1.4.3 Actions

(1) The rear wall is subject to backfill earth pressure, residual water pressure etc., from outside. However, because these are mutually cancelled out by internal earth pressure, in general cases, examination of this type of action can be omitted.

(2) The internal earth pressure and residual water pressure acting on cellular blocks can be considered as shown in **Fig. 1.4.3**. In the cases where backfilled is considered a part of the wall, the stress on the outer walls and the rear walls due to the filling are reduced by the active earth pressure, residual water pressure etc., after backfilling is completed. However, because in many cases filling is executed before backfilling in the construction process, performance verification of members should be performed for this condition.

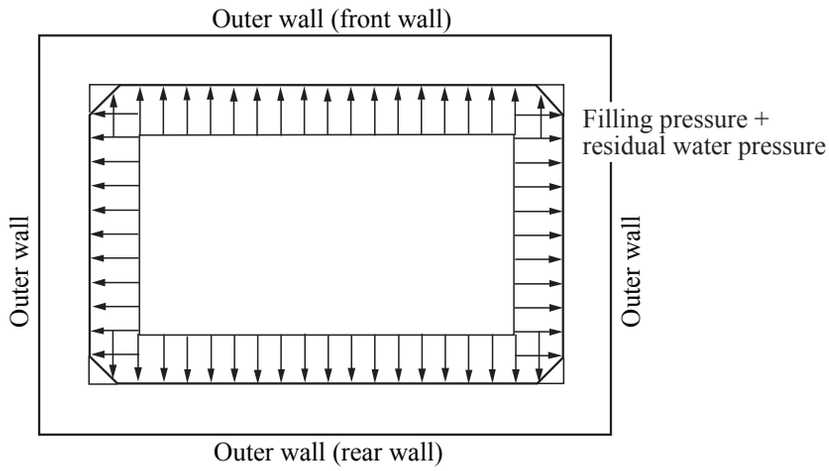

Fig. 1.4.3 Actions on Cellular Blocks

(3) Actions on front wall, rear wall, and outer walls

① As actions on the front wall, rear wall, and outer walls, internal earth pressure and residual water pressure shall be taken into account. Provided, however, that in the cases where cast-in-place concrete is placed on top of the cellular block to a degree such that the surcharge may not affect the interior of the cellular block, it is generally not necessary to consider the surcharge imposed on the cast-in-place concrete.

② Internal earth pressure

(a) The coefficient of earth pressure for internal earth pressure may be set as 0.6. Provided, however, that it is not necessary to consider the internal earth pressure when the filling consists of blocks or concrete.

(b) It may be considered that the earth pressure increases from the crown of block to a height equal to the inner width b_1 of the cellular block, but does not increase at points lower than this.

(c) The earth pressure acting on cellular blocks piled in multiple stages may be calculated as shown in **Fig. 1.4.4**. Provided, however, that when the inner width of the lower cellular blocks is less than that of the upper blocks (in the case of cellular block partitioned by partition walls), the earth pressure obtained for the upper block may be extended to the lower block without increasing its value.

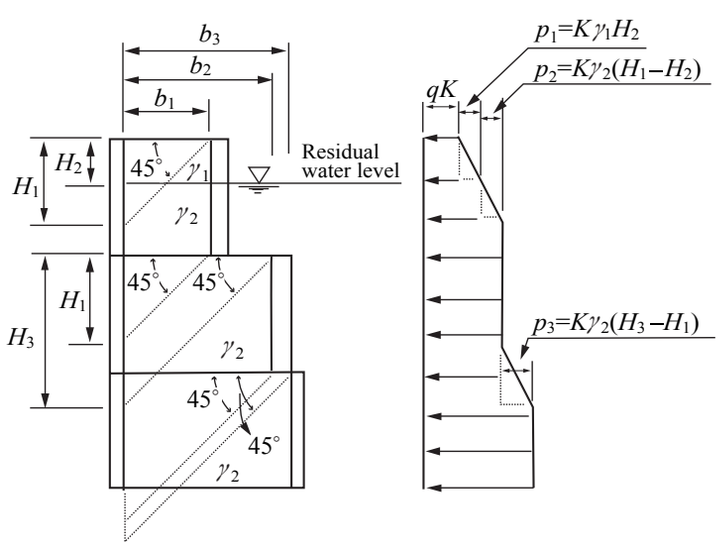

Fig. 1.4.4 Method of Calculating Internal Earth Pressure

The symbols in **Fig. 1.4.4** are as follows :

q : characteristic value of surcharge (kN/m^2)
γ_1 : specific weight of filling material above residual water level (kN/m^3)
γ_2 : specific weight of filling material below residual water level (kN/m^3)
K : coefficient of internal earth pressure $K = 0.6$
b_1 : inner width of block chamber (m) ; $b_1 = H_1$

(d) The internal earth pressure in cellular blocks is constrained by a frame and is considered to be the act similar to the filling of a caisson. Therefore, **1.2 Caissons** may be used as a reference.

③ Residual water pressure

(a) For quaywalls
Residual water pressure is calculated from the head difference between the residual water level and L.W.L.

(b) For breakwaters
Residual water pressure (internal water pressure in cellular blocks) is generally calculated from the hydraulic head difference between the water level inside the block and L.W.L. Provided, however, that when the wave trough acts on the front of a block, the increase of the internal water pressure shall be considered, depending on the circumstances.

When used as breakwaters or revetments and the wave trough acts on the front of the block, the increase of the residual water level difference should be examined. **Part II, Chapter 2, 4.7.2 Wave Force on Upright Walls** can be referred to for a calculation of water pressure in this case.

(4) Actions on partition walls
The partition wall shall be designed against extrusion failure of the outer walls from the partition wall due to the earth pressure of filling and residual water pressure. The characteristic values of loads against extrusion failure of partition walls and outer walls should be those of the earth pressure acting on the shaded parts in **Fig. 1.4.5.**

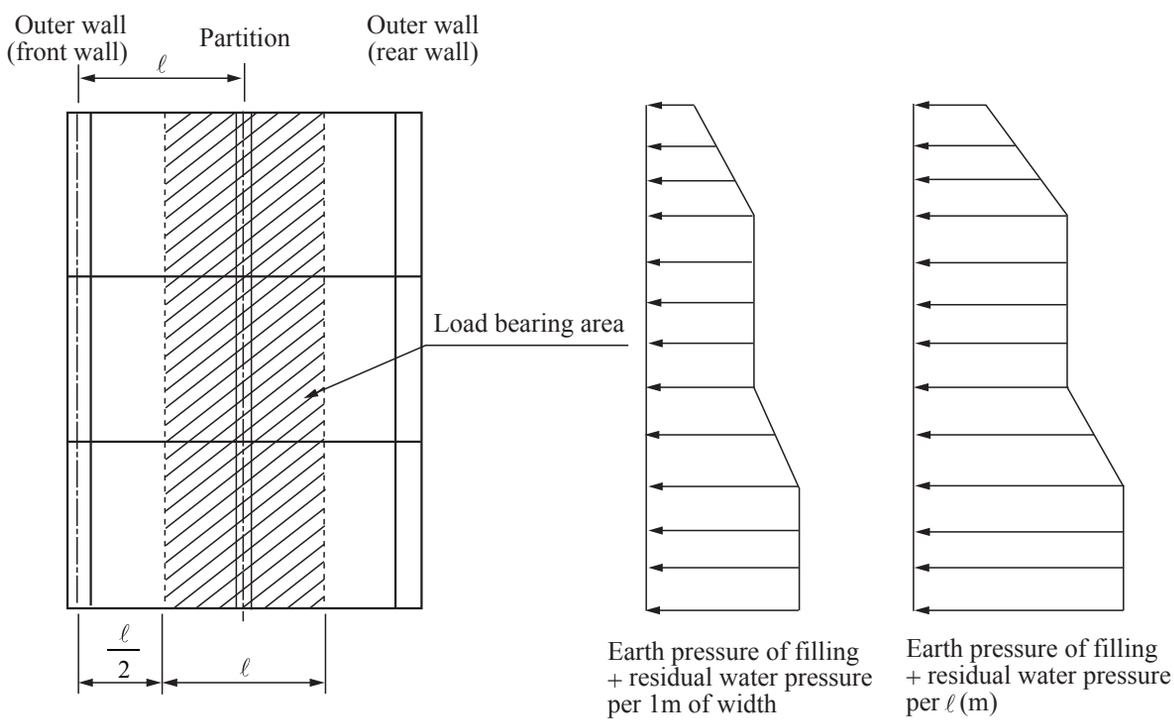

Fig. 1.4.5 Load for Examination of Extrusion Failure of Outer Walls from Partition Wall

(5) Wave force is generally not considered. However, in the cases where particularly strong impact wave force acts on the wall, it is necessary to consider this action.

(6) Actions during construction have many common points with those of L-shaped blocks. Therefore, **1.3 L-shaped Blocks** can be used as a reference.

(7) As the ordinary combinations of actions considered in the performance verifications and the load factors to be multiplied by the characteristic values of the respective actions, the combinations of actions and the load factors shown in **1.3.3 Actions** can be used.

(8) In the cases where the actions on members of cellular blocks are divided for convenience of calculation, **1.3.3 Actions** can be used as a reference.

1.4.4 Performance Verification

(1) Rectangular Cellular Blocks

① Outer walls

(a) The section force generated in a rectangular cellular block is solved by assuming the block as a rigid box frame for each unit height against the equivalent uniform load converted from the actual load distribution.

(b) The span used for calculations is measured between the centers of the connected walls.

② Partition wall

(a) The section forces acting on partition walls are calculated in the same way as that of outer walls.

(b) When any difference of filling height between neighboring chambers may occur during execution, the partition wall should be designed against the earth pressure caused by the difference.

(c) The span used for calculations is measured between the centers of the connected walls.

③ Footings

(a) Footings may be designed as cantilever slabs supported by the outer walls.

(b) The span of footing is the distance from the front of the outer wall to the tip of the footing.

1.5 Upright Wave-absorbing Caissons

Public Notice

Performance Criteria of Upright Wave-absorbing Caisson

Article 26

The provisions of Article 23 shall be applied to an upright wave-absorbing caisson of reinforced concrete construction (hereinafter referred to as "upright wave-absorbing caisson" in this article) with modifications as necessary.

2. In addition to the provisions of the preceding paragraph, the performance criteria of an upright wave-absorbing caisson shall be as specified in the subsequent items in consideration of the type of facilities.

(1) The risk of impairing the integrity of the wave-absorbing part of an upright wave-absorbing caisson shall be equal to or less than the threshold level under the variable action situation in which the dominant action is variable waves.

(2) The degree of damage in the accidental action situations in which the dominant action is the impact by drifting objects shall be equal to or less than the threshold level.

[Commentary]

(1) Performance Criteria of Upright Wave-absorbing Caissons

In addition, the performance criteria and the setting of design situations (excluding accidental situations) of caissons in **1.2 Caissons**. The performance criteria and the provision in regard to design situations (excluding accidental situations) of upright wave-absorbing caissons shall be as specified in ①.

① Wave-absorbing part

(a) Variable actions in which the dominating action is variable waves (serviceability)

1) Front wall slit

The performance criteria and the setting of design situations (excluding accidental situations) of front wall slits of upright wave-absorbing caissons shall be as shown in the **Attached Table 11**.

Attached Table 11 Performance Criteria and Settings for Design Situations (excluding accidental situations) of Front Wall Slits of Upright Wave-absorbing Caissons

Ministerial Ordinance			Public Notice			Performance requirements	Design situation			Verification item	Index of standard limit value
Article	Paragraph	Item	Article	Paragraph	Item		Situation	Dominating action	Non-dominating action		
7	1	–	26	2	1	Serviceability	Variable	Variable waves*1)	Water pressure, axial force transmitted from top of front wall	Cross-sectional failure of front wall slit	Design cross-sectional strength (ultimate limit state)
								Variable waves*2)		Serviceability of cross section of front wall slit	Limit value of crack caused by bending (serviceability limit state)
								Repeated action of waves*3)		Fatigue failure of front wall slit	Design fatigue strength (fatigue limit state)

*1) Here, among waves specified, Article 8, Paragraph 1.1 of the Public Notice, the waves shall be waves which are used in performance verification of the structural stability of the objective facilities.

*2) Here, among the waves specified, Article 8, Paragraph 1.2 of the Public Notice, the wave having a height greater than the specified waves which attack with a frequency on the order of 10^4 times during the design working life shall be used as a standard.

*3) Here, among the waves specified , Article 8, Paragraph 1.2 of the Public Notice, the waves shall be set appropriately depending on the frequency of appearance in regard to wave height and wave period occurring during the design working life.

2) Partition wall slits and outer wall slits

The performance criteria and the settings of design situations (excluding accidental situations) of partition wall slits and outer wall slits shall follow the performance criteria and the setting of design situations (excluding accidental situations) of front wall slits shown in a), providing that the non-dominating action is water pressure and replacing "front wall slits" with "partition wall slits and side wall slits".

3) Upper beam

The performance criteria and the setting of design situations (excluding accidental situations) of upper

beams shall follow the performance criteria and the settings of design situations (excluding accidental situations) of front wall slit shown in a), providing that the non-dominating actions are water pressure, the support reaction transmitted by the slit part, the wave force acting on the ceiling slab, the self weight of the ceiling slab, and the self weight of the upper beam and replacing "front wall slits" with "upper beam".

4) Lower beam
The performance criteria and the setting of design situations (excluding accidental situations) of lower wall slits shall follow the performance criteria and the setting of design situations (excluding accidental situations) of front wall slits shown in a), providing that the non-dominating actions are water pressure and the support reactions transmitted by the slit part and lower slab And replacing the "front wall slits" with "lower beam".

(b) Accidental situation in which dominating action is impact by drifting objects (serviceability)
The performance criteria and the setting of design situations (limited to accidental situations) for accidental situations of in which drifting objects collided with upright wave-absorbing caissons shall be as shown in the **Attached Table 12**.

Attached Table 12 Settings for Performance Criteria and Design Situations (limited to accidental situations) of Wave-absorbing Part of Upright Wave-absorbing Caissons

Ministerial Ordinance			Public Notice			Performance requirements	Design situation			Verification item	Index of standard limit value
Article	Paragraph	Item	Article	Paragraph	Item		Situation	Dominating action	Non-dominating action		
7	2	2	26	2	2	Serviceability	Accidental	Impact by drifting objects such as driftwood, etc. carried by water	Self weight, water pressure	Cross-sectional failure of members of wave-dissipating part	Design cross-sectional strength (ultimate limit state)

[Technical Note]

1.5.1 Fundamentals of Performance Verification

(1) Upright wave-absorbing caissons are caissons with a slit-shaped wall at the front face, and have an internal wave chamber which gives the caisson a wave-absorbing function; this type of structure is used in quaywalls, breakwaters, and similar facilities. At present, various structures have been developed as shapes for upright wave-absorbing caissons. However, these can be broadly classified into the permeable and impermeable types. As to the slit shape, the vertical slit type is the most widely used. As other types, the horizontal slit and perforated wall types have been used in actual facilities. In performance verification of the members, it is preferable to make an adequate study of the characteristics of the respective structures, and to carry out hydraulic model experiments suited to the conditions.

(2) As the procedure for performance verification of upright wave-absorbing caissons, **1.2 Caissons** can be used as a reference.

(3) The names of members of the relatively common vertical slit caisson are shown in **Fig. 1.5.1**.

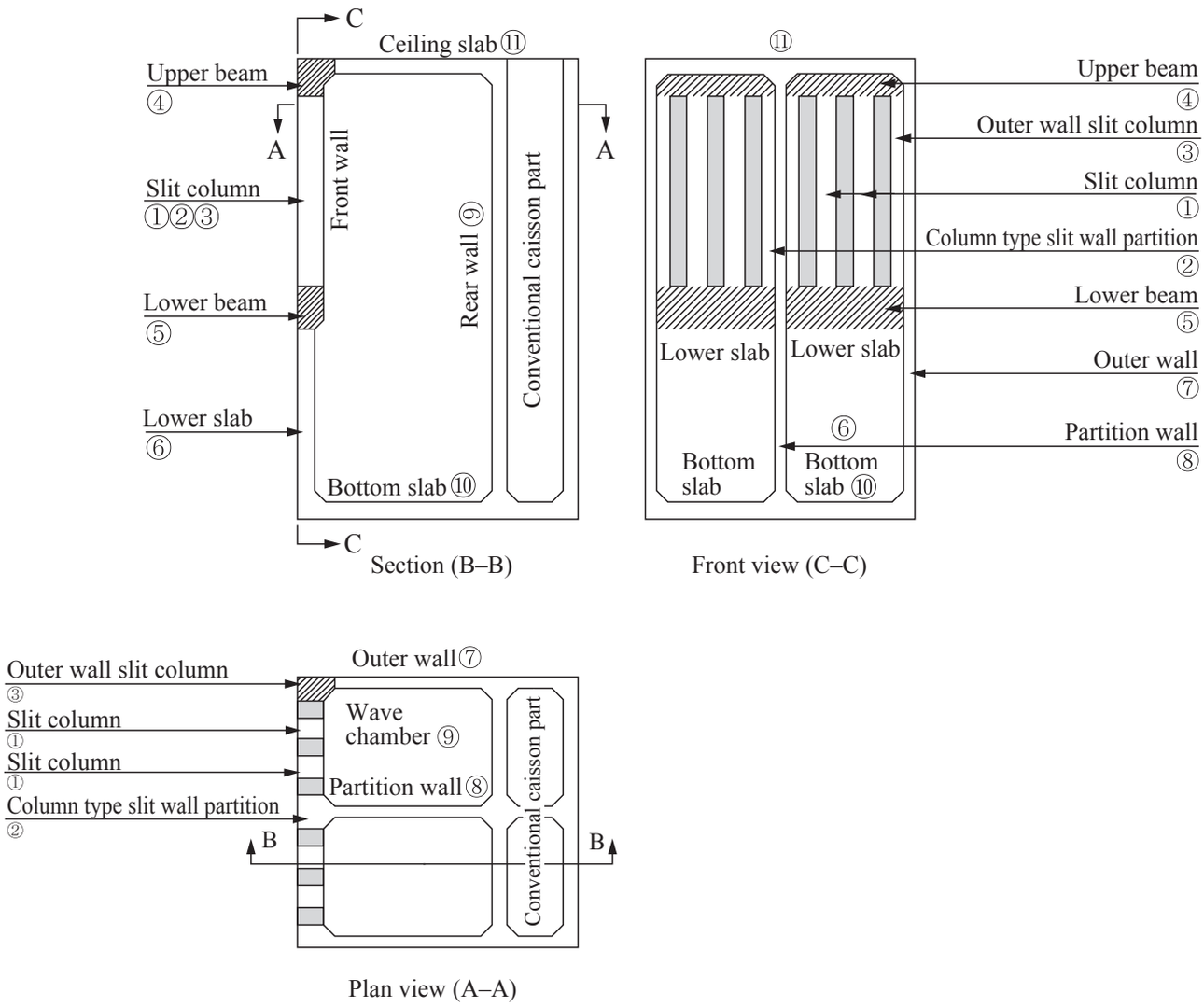

Fig. 1.5.1 Names of Vertical Slit Caisson Members

1.5.2 Actions

(1) For actions which should be considered in performance verification of upright wave-absorbing caissons, **1.2 Caissons** can be used as a reference.

(2) Wave forces acting on the members of slit caissons vary significantly, depending on the structure of the water chamber and whether or not it has a ceiling slab. Therefore, as well as referring to past cases of implementation, appropriate hydraulic model experiments are recommended in accordance with the individual conditions prior to design.

(3) For the wave forces acting on members, **Part II, Chapter 2, 4.7.2(7) Wave Forces Acting on Upright Wave-absorbing Caisson** [18] can be used as a reference.

(4) If the top of the water chamber is completely sealed by the ceiling slab, an impulsive pressure may be generated by the compression of the air trapped beneath the top at the instant when the front of incoming wave shuts off the slits or perforations. Provision of ventilation holes with a suitable opening ratio in the ceiling slab can reduce impulsive pressure due to air compression. The opening ratio of these holes should be carefully designed. If too great, the wave surface collides directly with the ceiling slab, and this could produce a greater impulsive uplift pressure than that of no ventilation [2), 3)]. For details, reference 19) and 20) may be used.

(5) The actions which should be considered in performance verifications of the members of the wave chambers in upright wave-absorbing caissons are shown in **Table 1.5.1**.

Table 1.5.1 External Forces for Design of Members of Water Chamber of Wave-dissipating Caisson

Member		Member number	Actions
Front wall	Slit column	①	• Water pressure while afloat • Wave pressure (parallel/perpendicular to face line) • Impact force from driftwood and other drifting objects • Axial force transmitted from upper beam
	Column type slit wall partition	②	• Wave pressure including wave force transmitted from partition wall
	Outer wall slit column	③	• Water pressure while afloat including wave force transmitted from sidewalls • Wave pressure (ditto)
	Upper beam	④	• Vertical loads from above and below • Water pressure while afloat (reaction transmitted from slit column) • Wave pressure (wave force acting on the beam itself and slit column reaction)
	Lower beam	⑤	• Water pressure while afloat (reaction from slit column and lower wall, load acting on the beam itself) • Wave pressure (ditto)
	Lower slab	⑥	• Water pressure while afloat • Wave pressure
Outer wall		⑦	• Water pressure while afloat • Wave pressure
Partition		⑧	• Wave pressure acts on both sides separately in the direction parallel to face line • Fender reaction
Rear wall		⑨	• Wave pressure • Earth pressure, residual water pressure
Bottom slab		⑩	• Bottom reaction and bottom slab weight in each design situation, water head difference, and water pressure while float
Ceiling slab		⑪	• Wave pressure (upwards, downwards) • Surcharge • Self weight

Note: Member numbers are those shown in **Fig. 1.5.1**

1.6 Hybrid Caissons

Public Notice

Performance Criteria of Hybrid Caissons

Article 27
The provisions of Article 23 shall be applied to the performance criteria of a hybrid caisson (a caisson having a composite structure of steel plates and concrete) with modification as necessary.

[Commentary]

(1) Performance Criteria of Hybrid Caissons
The provisions in connection with the performance criteria and design situations (excluding accidental situations) of hybrid caissons shall be as shown in the **Attached Table 13**, in addition to the performance criteria and setting of design situations (excluding accidental situations) of caissons in **1.2 Caissons**.

Attached Table 13 Performance Criteria and Setting of Design Situations (excluding accidental situations) of Hybrid Caissons

Ministerial Ordinance			Public Notice			Performance requirements	Design situation			Verification item	Index of standard limit value
Article	Paragraph	Item	Article	Paragraph	Item		Situation	Dominating action	Non-dominating action		
7	1	—	27	1	—	Serviceability	Permanent (Variable)	Water pressure during installation	—	Cross-sectional failure of partition wall (axial force, bending, shear)	• Design cross-sectional strength (ultimate limit state) • Design cross-sectional strength considering local buckling (ultimate limit state)
										Extrusion of members	Design strength for extrusion of members
								Variable wave (Level 1 earthquake ground motion)	Self weight, surcharge, bottom reaction, internal earth pressure, internal water pressure, earth pressure, force transmitted from footing	Cross-sectional failure of partition wall (axial force, bending, shear)	• Design cross-sectional strength (ultimate limit state) • Design cross-sectional strength considering local buckling (ultimate limit state)
										Extrusion of members	Design strength for extrusion of members
								Internal earth pressure (Variable wave) (Level 1 earthquake ground motion)	Internal water pressure, force transmitted from footing (Internal earth pressure, internal water pressure, force transmitted from footing)	Cross-sectional failure of outer wall of composite structure*1 (Horizontal slip shear force)	Design horizontal shear transfer resistance
										Cross-sectional failure of outer wall of composite structure*1 (Bending, shear)	• Design cross-sectional strength (ultimate limit state) • Design cross-sectional strength considering local buckling (ultimate limit state)

*1): Slab member (composite slab) comprising steel plate and concrete unified by shear connectors.

[Technical Note]

1.6.1 General

(1) In this chapter, caissons with a composite structural type of steel plates and concrete are defined as hybrid caissons. By combining several different materials, composite structures achieve superior structural strength properties that are not possible using a single material alone. In “composite structures”, the member sections consist of a combination of different materials to achieve the functions of the structure. Hybrid caissons, like conventional steel reinforced concrete caissons, are used in breakwaters, quays, and coastal revetments. **Fig. 1.6.1** shows two types of structural members of hybrid caissons commonly used in the port and harbor structures. One is a composite member structure with steel plates arranged on one side only. The other is an SRC structure with H-shaped steel embedded inside it. In this chapter the term “hybrid caisson” is used as general term for caissons using these two structural types.

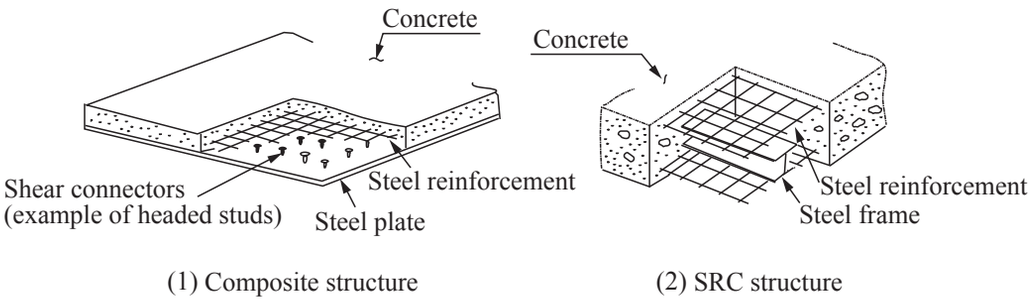

Fig. 1.6.1 Hybrid Structural Members

1.6.2 Fundamentals of Performance Verification

(1) **Fig. 1.6.2** shows an example of a hybrid caisson structure.

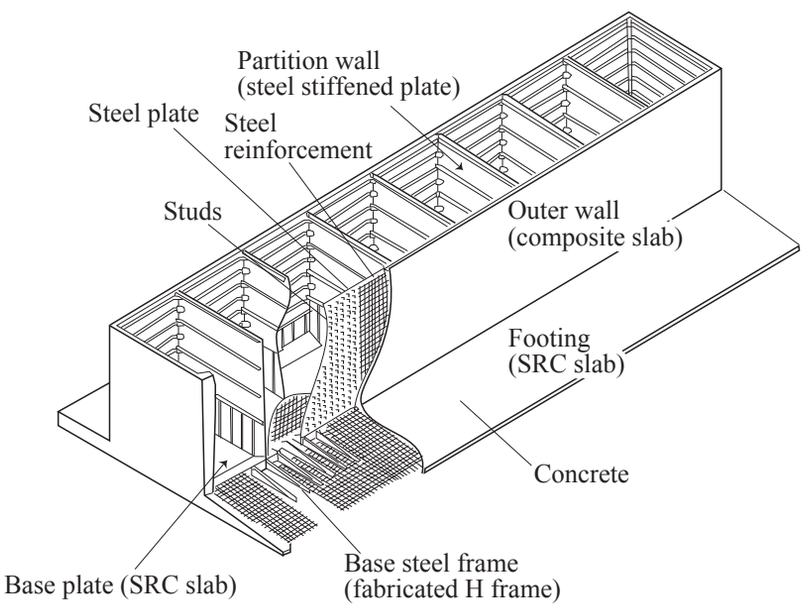

Fig. 1.6.2 Example of a Hybrid Caisson Structure

(2) In performance verification of hybrid caissons, the **Hybrid Caisson Deign Manual** [21] and References 22) and 23) can be used as reference.

(3) For the procedure for performance verification of hybrid caissons, **1.2 Caissons** can generally be used as a reference. For composite slabs, **Fig. 1.6.3** can be used as a reference.

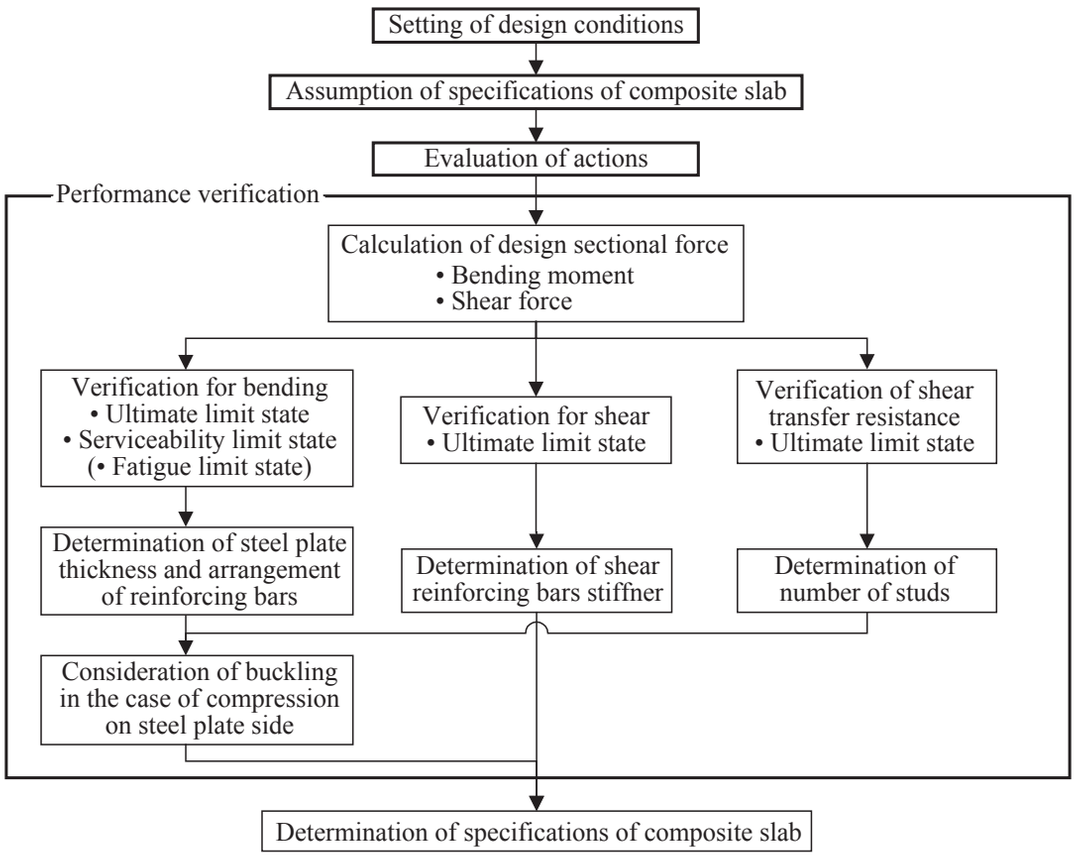

Fig. 1.6.3 Example of Performance Verification for Composite Slab of Hybrid Caisson

1.6.3 Actions

The actions which should be considered in performance verification of hybrid caissons conform to those for caissons; therefore, **1.2.3 Actions** can be used as a reference. Provided, however, that in the cases where steel partition walls are used as the partition walls in a hybrid caisson, it is preferable to consider the actions due to the difference in water pressure from inside and outside of the caisson while afloat and during installation, the actions of earth pressure and waves etc. and the bottom reaction of the bottom slabs and footings as actions acting on the partition wall.

1.6.4 Performance Verification

(1) Calculation of Sectional Force
For calculations of sectional force, **1.2.4 Performance Verification** can be used as a reference, corresponding to the caissons.

(2) Performance Verification of Composite Slab
In performance verification of composite slabs, the following items shall generally be considered.

① Flexural moment
For the flexural moment, the section stress of composite slabs can be calculated as a double reinforced concrete member by converting the steel plates to equivalent reinforcements.

② Shearing Force
The shearing force of composite slabs can be analyzed in the same manner as that of reinforced concrete slabs.

③ Integration of Steel and Concrete
Shear connectors are particularly important structural elements for the integration of materials in a hybrid structure. In composite slabs, headed studs and shape steel are most commonly used as the shear connectors. The required quantity and arrangement of shear connectors should be designed in consideration of preventing the steel plate separating from the concrete (especially when compressive stress is active) and securing the transmission of horizontal shear force occurring on the interface between steel plate and concrete.